SAUER DANFOSS

Genuine Parts

Series 90
42 cc Axial Piston Pump

Parts Manual

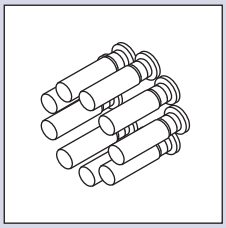

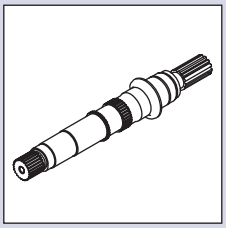

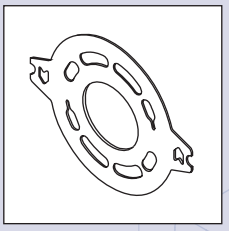

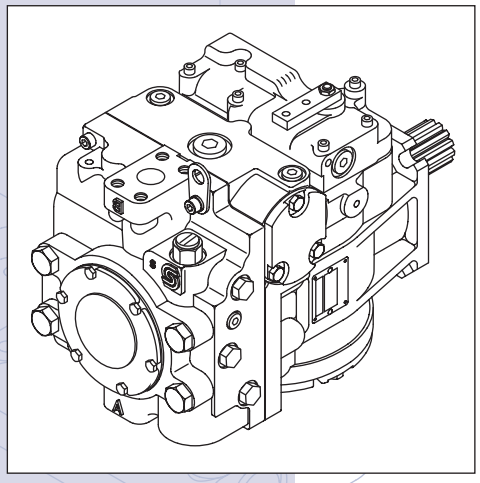

© 2012 Sauer-Danfoss. All rights reserved.

Sauer-Danfoss accepts no responsibility for possible errors in catalogs, brochures and other printed material. Sauer-Danfoss reserves the right to alter its products without prior notice. This also applies to products already ordered provided that such alterations aren't in conflict with agreed specifications. All trademarks in this material are properties of their respective owners.

Front cover illustrations: P100 609, P100 681, P100 680, P100 679

Series 90 42 cc Axial Piston Pump Service Parts Manual

Contents

GENERAL INFORMATION

Service parts identification 4
Nameplate 4
Date code 5
Service bulletins 5
Procedure to identify a part 5
Order code 7

VARIABLE DISPLACEMENT PUMP

Common parts 8-25
Special hardware 10-25
Displacement limitation 26-35
End cap 36-37
Charging system 38-39
Auxiliary mounting 40-43
Charge pressure setting 44-45
Shaft 44-45
Control 46-69
Filtration 70-71
High pressure protection 72-75
Orifice 76-87

SERVICE BULLETIN

Overhaul seal kit 88

SB-1988-023 (piston improvement) 89
SB-1989-002 (incorporation of adjustable charge relief valve) 90
SB-1991-007 (servo system change) 91
SB-1992-008 (pump redesign) 92-93
SB-1993-002 (HDC gasket change) 94
SB-1993-012 (removal of valve plate from cylinder block kit) 95
SB-1993-015 (servo arm/speed ring interference) 96
SB-1994-018 (side cover washer elimination) 97
SB-1995-002 (charge pump shaft key change) 98
SB-1995-003 (MDC w/electric solenoid override manifold change) 99
SB-1995-004 (charge pump design change) 100-101
SB-1995-005 (obsolete servo system parts) 102
SB-1995-006 (end cap screw size change) 103
SB-1995-026 ((valve plate part number change) 104
SB-1996-004 (side cover design change) 105
SB-1997-014 (charge pump shaft part number change) 106
SB-1999-041 (side cover insert material change) 107
SB-2002-016 (swashplate change) 108
SB-2005-011 (auxiliary flange charge pump cover) 109
SB-2009-074 (A auxiliary pad) 110
SB-2009-075 (B auxiliary pad) 111
SB-2009-076 (C auxiliary pad) 112

SERVICE PARTS INDENTIFICATION

The following information and procedure is used to identify the module group, item number, manufacture date, part number, and part name of the parts included in the Series 90, 42 cc variable displacement pumps.

The parts listed include all parts which may be used when performing either "Minor Repairs," "Major Repairs" or "Conversions" on the Series 90, 42 cc pump.

NAMEPLATE

Each unit will have a nameplate affixed to the housing. The nameplate will include the following information.

Model Code
The Sauer-Danfoss model code completely defines the specific unit and must be used when ordering parts to service this product.



Model Number
The Sauer-Danfoss model number is used by the factory in manufacturing. On repeat orders, a complete unit can be ordered by the model number.

Serial Number
The Sauer-Danfoss serial number is used to identify the manufacture date and the unit sequence in the build. The serial number is also used to identify the units warranty time period.

The letter code indicates the location of original manufacture (assembly). "N" indicates the unit was originally assembled in Neumunster, Germany.

The first number (2 digits) indicates the year of manufacture. ("01" would indicate the unit was manufactured in 2001)

The second number (2 digits) indicates the calendar week of manufacture.

The third number (5 digits) is a sequential number used to identify a specific unit.

DATE CODE

The date code is defined as the year and week of manufacture. The same item number may list more than one part number. This indicates that there is more than one configuration for that item number. You will see that there are different date codes for the different part numbers. Find the date code of your unit from the nameplate to determine which service part number you need to order.

EXAMPLE: The service part desired is Item E30

Order Code	Item	Date Begin	Date End	Part Number	Part Name	Qty. per Model/Kit
GBA	E30	96-03		11056529	Guide post	1
	"	87-42	96-02	344465	Guide post (SB-1995-006)	1

All units using this order code with a date code of 87-42 and up to and including 96-02, must use part number "344465". All units with a date code of 96-03 and newer must use part number "11056529.".

SERVICE BULLETINS

A Service Bulletin Number (SB-_ _ _ _ - _ _ _) may follow the "Part Name" of the part you desire. You must read that Service Bulletin prior to ordering that part. The information contained in these Service Bulletins, as of the print date of this bulletin, are included at the end of this manual. Service Bulletins contain more detailed information such as interchangeability, what additional parts are involved, etc. It is suggested that you add additional Service Bulletins to this manual as you recieve them.

PROCEDURE TO IDENTIFY A PART

General

The modular design of Series 90 units results in a simplified service parts list and part number identification procedure.

The same item numbers are used for same part names on all units within a product type. (Example: The lip seal - Item L40 has the same item number on all pumps.)

A part number that has another number following it in parentheses is done to make this a world wide manual. The first number is sold in Germany. The number in parentheses is sold in the United States. (Example: 9008000-0118, customers would order 9008000-0118 if ordering the part in the United States.)

Example of a Part Identification

The nameplate on a Series 90 pump has an Order Code of 90R042 MA 1 NN 80 R 3 C3 C 03 GBA 32 32 24. Use the following procedures to determine the part number of the drive shaft used on this pump.

1) Referring to the input shaft module in the Order Code (see page 7), the input shaft option for this pump is identified by the code "C3". (90R042 MA 1 NN 80 R 3 **C3** C 03 GBA 32 32 24)

2) Referring to the Service Parts List, find the shaft group. Next find the order code that relates to this unit, which is "C3". The shaft is found to be item L100 and part number 340521.

Notes

Order code

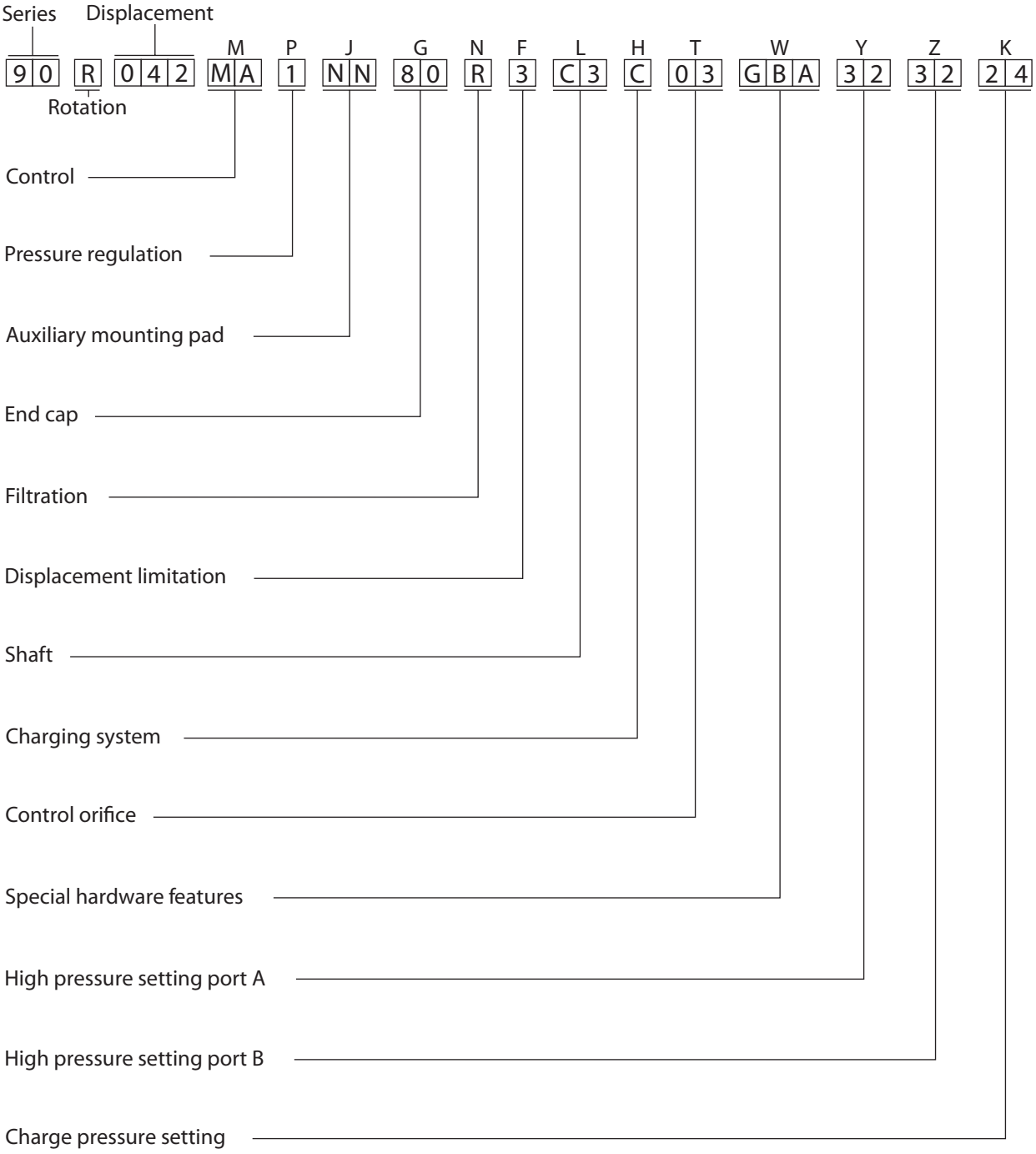

P100 678E

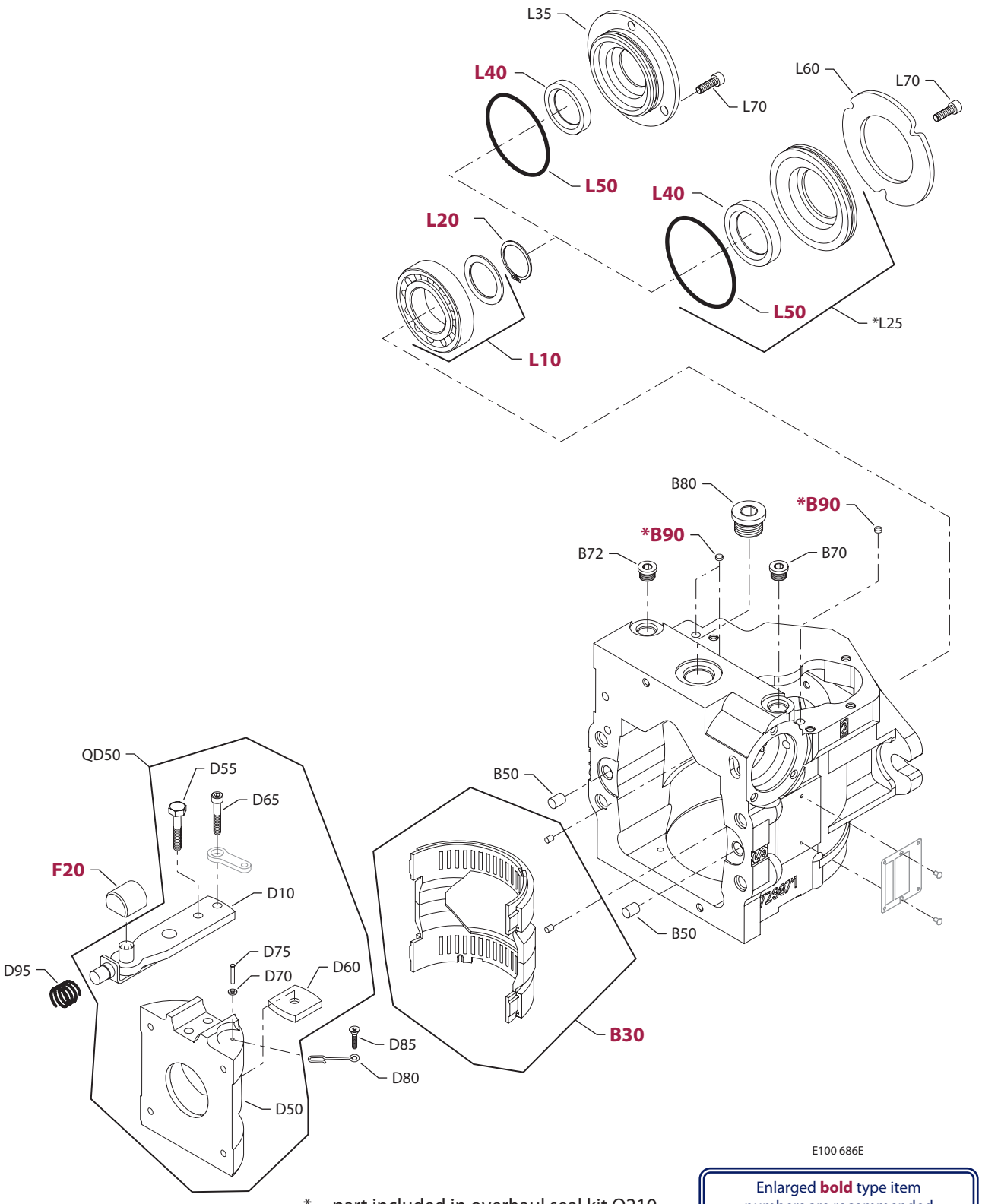

* = part included in overhaul seal kit Q210

Enlarged **bold** type item numbers are recommended part to stock for servicing.

COMMON PARTS

Order Code	Item	Date Begin	Date End	Part Number	Part Name	Qty. per Model/Kit
	B30	87-42		345124	Bearing assembly	1
	B50	87-42		9004800-3708	Pin	2
	B70	87-42		140644	Plug assembly	1
	B72	87-42		140644	Plug assembly	1
	B80	87-42		315325 (9005110-8700)	Plug assembly	1
	B90	87-42		9803390	Control filter screen	3
	D10	87-42		502976	Servo arm assembly (SB-2003-015)	1
	D50	87-42		516199	Swashplate (SB-2002-016)	1
	D55	87-42		648436	Screw	1
	D60	87-42		766014	Swashplate guide	1
	D65	87-42		354373	Fillister head screw	1
	D70	87-42		9009625-0146	Washer	1
	D75	87-42		326637	Spiral head pin	1
	D80	87-42		648402	Cage locator	1
	D85	87-42		509527	Screw	1
	D95	87-42		648675	Spring	1
	F20	87-42		648303	Slider block	1
	L10	92-16		11018482	Bearing	1
	L10	87-42	92-15	690305	Bearing (SB-1992-008)	1
	L20	92-16		9006300-0137	Retaining ring	1
	L20	87-42	92-15	392134	Retaining ring (SB-1992-008)	1
	L25	92-16		11060010	Seal carrier assembly	1
	L35	87-42	92-15	689521	Seal carrier (SB-1992-008)	1
	L40	10-33		11013519	Lip seal	1
	L40	92-16	10-32	9008000-0118	Lip seal	1
	L40	87-42	92-15	510390	Lip seal (SB-1992-008)	1
	L50	92-16		780247	O-ring	1
	L50	87-42	92-15	552224 (9004104-0360)	O-ring (SB-1992-008)	1
	L60	92-16		516763	Retainer plate (SB-1992-008)	1
	L70	92-16		745208	Screw	3
	L70	87-42	92-15	672493 (9007210-0604)	Screw (SB-1992-008)	3
	QD50	87-42		365957	Swashplate kit	1

(EBA & EDI)

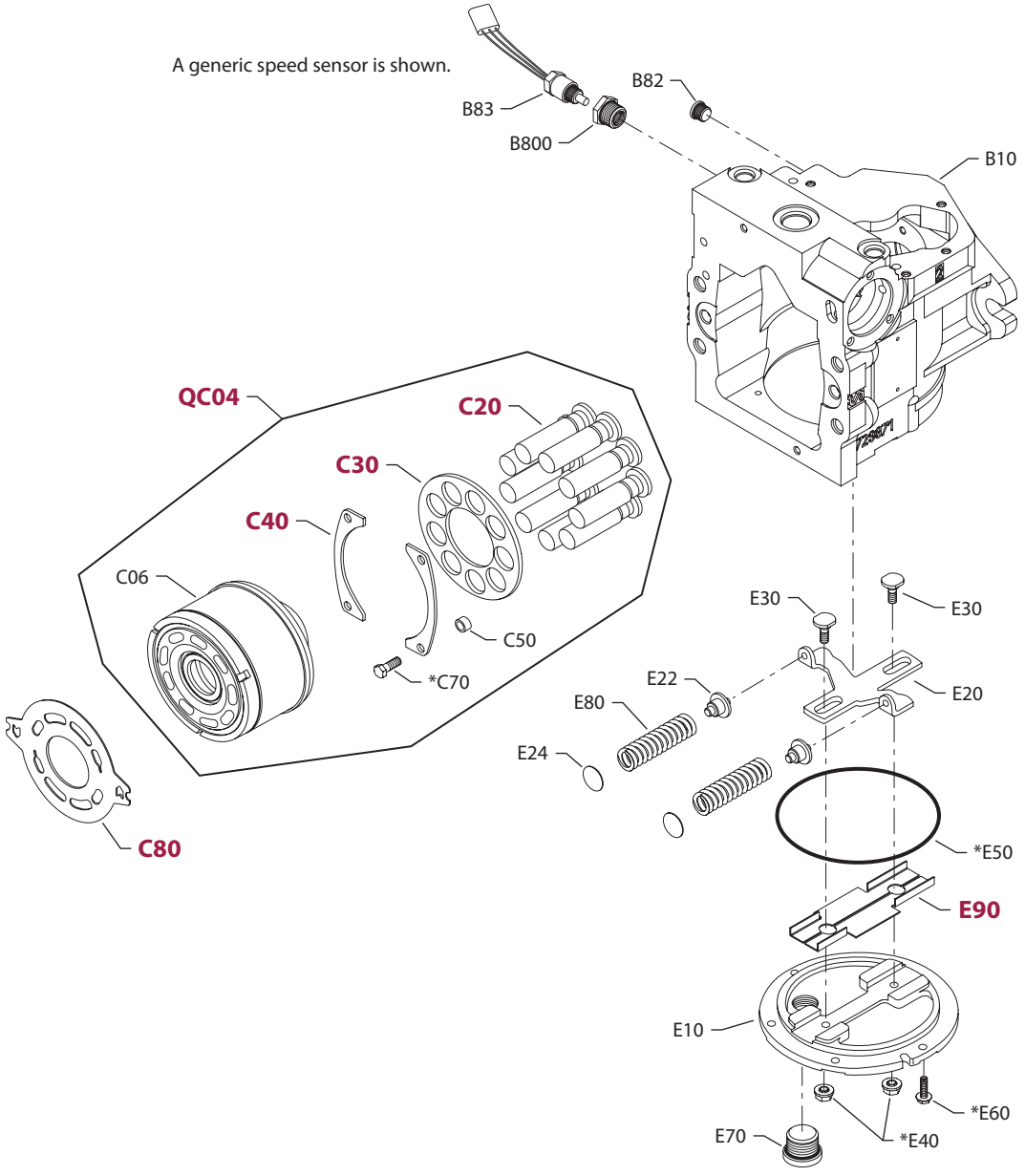

E101 850E

* = part included in overhaul seal kit Q210

Enlarged **bold** type item numbers are recommended part to stock for servicing.

COMMON PARTS

Order Code	Item	Date Begin	Date End	Part Number	Part Name	Qty. per Model/Kit
	C13	87-42		647925	Spring seat	1
	C14	87-42		762369	Cylinder block spring	1
	C15	87-42		647909	Spring retainer	1
	C16	87-42		9006250-0169	Retaining ring	1
	C20	87-42		706101	Piston assembly (SB1988-023)	9
	C30	87-42		735472	Slipper guide	1
	C40	87-42		321612	Slipper guide bearing	2
	C50	87-42		367631	Spacer	4
	C70	87-42		648477	Screw	4
	E10	96-03		501570	Side cover	1
	E10	92-16	96-02	506380	Side cover kit (SB-1992-008 & SB-1996-004)	1
	E20	87-42		731984	Leveler	1
	E22	87-42		720920	Spring seat	2
	E24	87-42		359034	Shim	2
	E30	96-07		11056529	Guide post	2
	E30	87-42	96-07	344465	Guide post (SB-1996-004)	2
	E40	87-42		517862	Seal nut	2
	E50	87-42		517376	O-ring	1
	E60	87-42		517229	Screw (SB-1994-018)	6
	E70	87-42		315325 (9005110-8700)	Plug assembly	1
	E80	87-42		332684	Spring	2
	E90	96-02		513885	Insert assembly (SB-1996-004 & SB-1999-041)	1

SPECIAL HARDWARE

EBA	B10	06-24		510143	Housing	1
	B82	06-24		140644	Plug assembly	1
	B83	06-24		KPPG13408	Speed sensor	1
	B800	06-24		519414	Reducer plug assembly	1
	C06	06-24		11094174	Cylinder block assembly with speed ring	1
	C80	06-24		11015183	Valve plate	1
	QC04	06-24		11097869	Cylinder block kit with speed ring	1

EDI	B10	00-29		510143	Housing	1
	B82	00-29		140644	Plug assembly	1
	B83	00-29		KPPG15408	Speed sensor	1
	B800	00-29		519414	Reducer plug assembly	1
	C06	00-29		11094174	Cylinder block assembly with speed ring	1
	C80	00-29		11018107	Valve plate, CW	1
	C80	00-29		11018106	Valve plate, CCW	1
	QC04	00-29		11097869	Cylinder block kit with speed ring	1

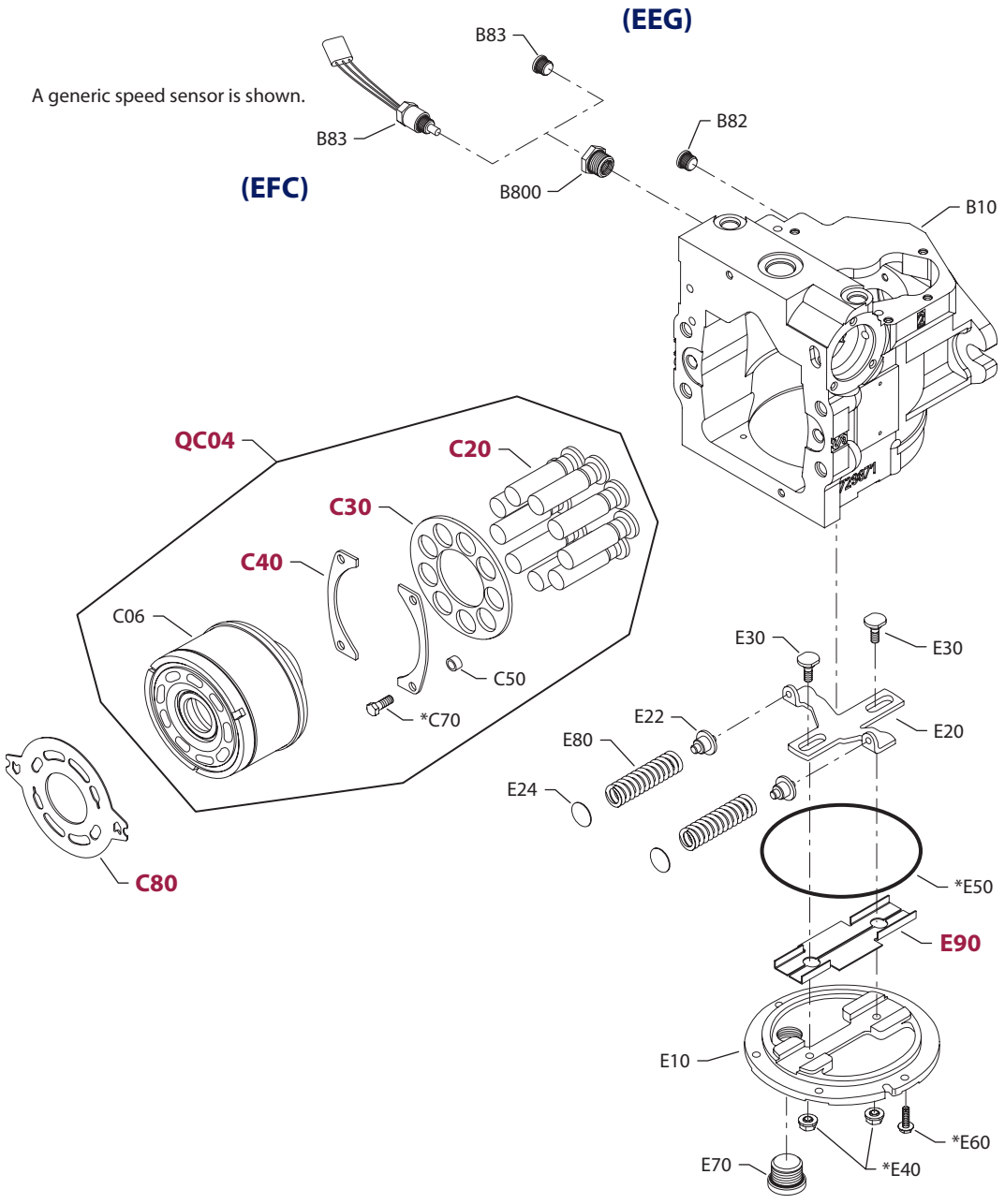

E101 851E

* = part included in overhaul seal kit Q210

Enlarged **bold** type item numbers are recommended part to stock for servicing.

COMMON PARTS

Order Code	Item	Date Begin	Date End	Part Number	Part Name	Qty. per Model/Kit
	C13	87-42		647925	Spring seat	1
	C14	87-42		762369	Cylinder block spring	1
	C15	87-42		647909	Spring retainer	1
	C16	87-42		9006250-0169	Retaining ring	1
	C20	87-42		706101	Piston assembly (SB1988-023)	9
	C30	87-42		735472	Slipper guide	1
	C40	87-42		321612	Slipper guide bearing	2
	C50	87-42		367631	Spacer	4
	C70	87-42		648477	Screw	4
	E10	96-03		501570	Side cover	1
	E10	92-16	96-02	506380	Side cover kit (SB-1992-008 & SB-1996-004)	1
	E20	87-42		731984	Leveler	1
	E22	87-42		720920	Spring seat	2
	E24	87-42		359034	Shim	2
	E30	96-07		11056529	Guide post	2
	E30	87-42	96-07	344465	Guide post (SB-1996-004)	2
	E40	87-42		517862	Seal nut	2
	E50	87-42		517376	O-ring	1
	E60	87-42		517229	Screw (SB-1994-018)	6
	E70	87-42		315325 (9005110-8700)	Plug assembly	1
	E80	87-42		332684	Spring	2
	E90	96-02		513885	Insert assembly (SB-1996-004 & SB-1999-041)	1

SPECIAL HARDWARE

EEG	B10	00-13		510143	Housing	1
	B82	00-13		140644	Plug assembly	1
	B83	00-13		140644	Plug assembly	1
	B800	00-13		519414	Reducer plug assembly	1
	C06	00-13		11094174	Cylinder block assembly with speed ring	1
	C80	00-13		11018107	Valve plate, CW	1
	C80	00-13		11018106	Valve plate, CCW	1
	QC04	00-13		11097869	Cylinder block kit with speed ring	1

EFC	B10	04-14		510143	Housing	1
	B82	04-14		140644	Plug assembly	1
	B83	04-14		KPPG156	Speed sensor	1
	B800	04-14		519414	Reducer plug assembly	1
	C06	04-14		11094174	Cylinder block assembly with speed ring	1
	C80	04-14		11015183	Valve plate	1
	QC04	04-14		11097869	Cylinder block kit with speed ring	1

(EFD & EFI)

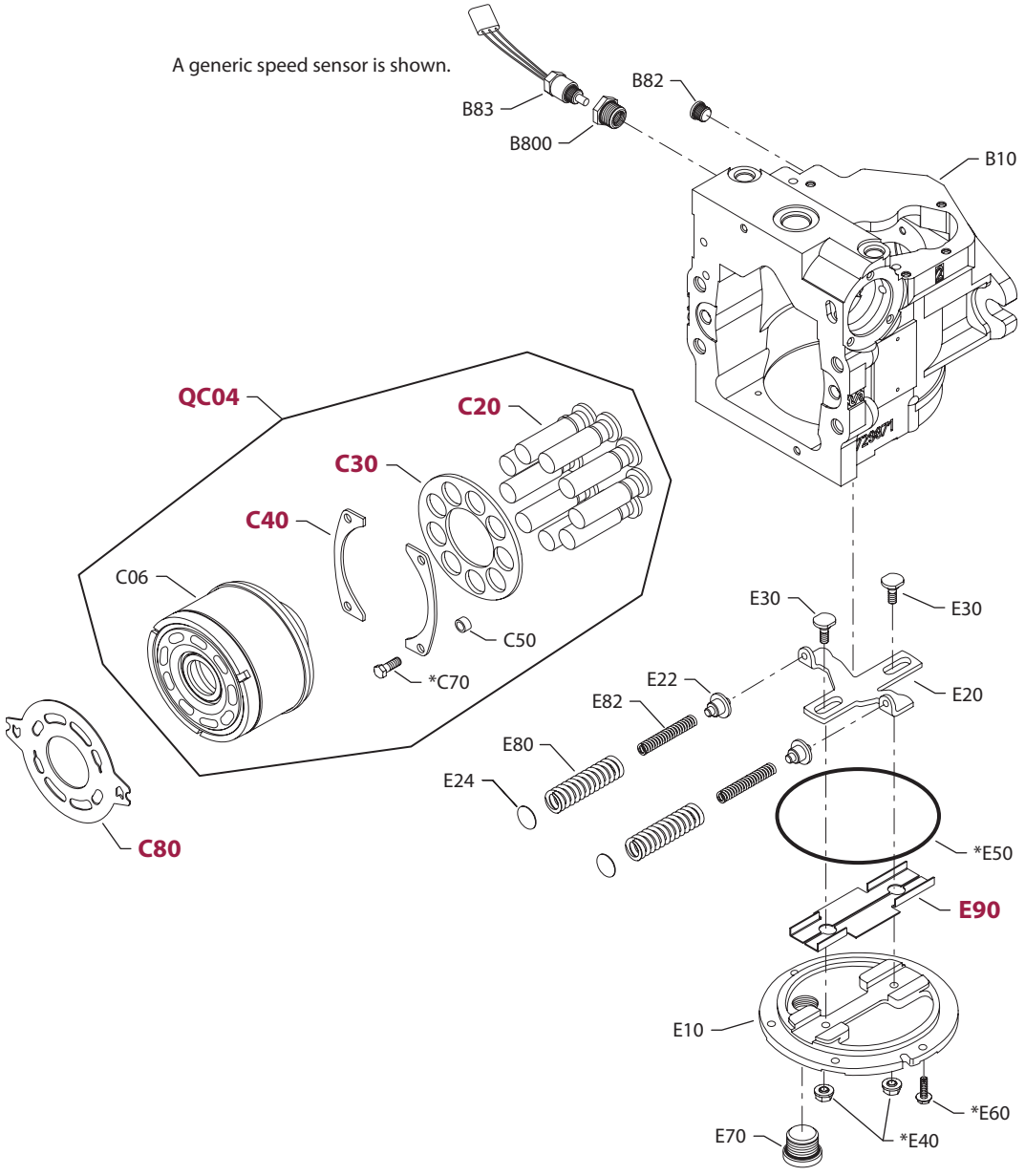

E101 852E

* = part included in overhaul seal kit Q210

Enlarged **bold** type item numbers are recommended part to stock for servicing.

COMMON PARTS

Order Code	Item	Date Begin	Date End	Part Number	Part Name	Qty. per Model/Kit
	C13	87-42		647925	Spring seat	1
	C14	87-42		762369	Cylinder block spring	1
	C15	87-42		647909	Spring retainer	1
	C16	87-42		9006250-0169	Retaining ring	1
	C20	87-42		706101	Piston assembly (SB1988-023)	9
	C30	87-42		735472	Slipper guide	1
	C40	87-42		321612	Slipper guide bearing	2
	C50	87-42		367631	Spacer	4
	C70	87-42		648477	Screw	4
	E10	96-03		501570	Side cover	1
	E10	92-16	96-02	506380	Side cover kit (SB-1992-008 & SB-1996-004)	1
	E20	87-42		731984	Leveler	1
	E22	87-42		720920	Spring seat	2
	E24	87-42		359034	Shim	2
	E30	96-07		11056529	Guide post	2
	E30	87-42	96-07	344465	Guide post (SB-1996-004)	2
	E40	87-42		517862	Seal nut	2
	E50	87-42		517376	O-ring	1
	E60	87-42		517229	Screw (SB-1994-018)	6
	E70	87-42		315325 (9005110-8700)	Plug assembly	1
	E80	87-42		332684	Spring	2
	E90	96-02		513885	Insert assembly (SB-1996-004 & SB-1999-041)	1

SPECIAL HARDWARE

EFD	B10	97-30		510143	Housing	1
	B82	97-30		140644	Plug assembly	1
	B83	97-30		KPPG156	Speed sensor	1
	B800	97-30		519414	Reducer plug assembly	1
	C06	97-30		11094174	Cylinder block assembly with speed ring	1
	C80	97-30		11015184	Valve plate	1
	E82	97-30		706853	Spring	1
	QC04	97-30		11097869	Cylinder block kit with speed ring	1

EFI	B10	98-12		510143	Housing	1
	B82	98-12		140644	Plug assembly	1
	B83	98-12		KPPG156	Speed sensor	1
	B800	98-12		519414	Reducer plug assembly	1
	C06	98-12		11094174	Cylinder block assembly with speed ring	1
	C80	98-12		11018107	Valve plate, CW	1
	C80	98-12		11018106	Valve plate, CCW	1
	QC04	98-12		11097869	Cylinder block kit with speed ring	1

(FAB, FAC & FAD)

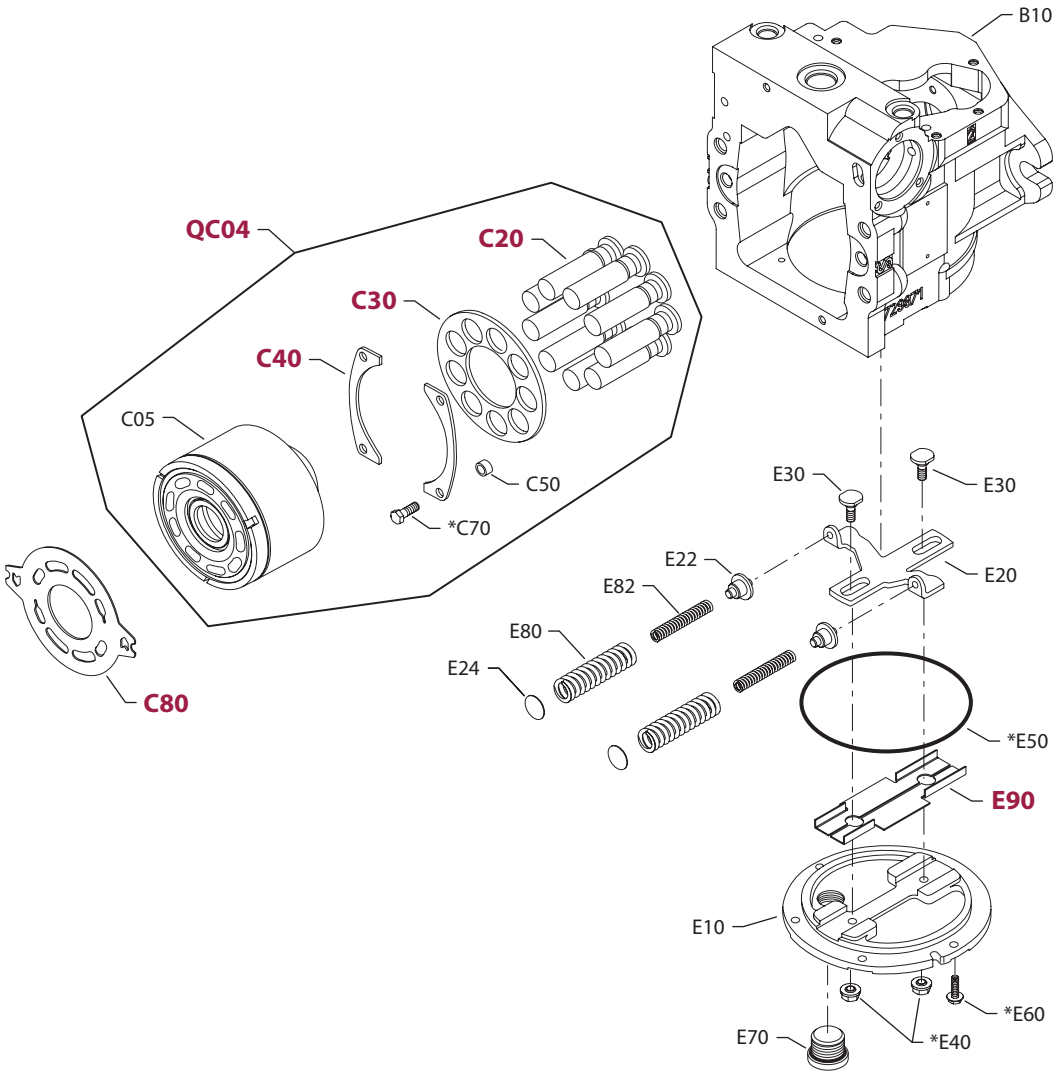

E100 687E

* = part included in overhaul seal kit Q210

Enlarged **bold** type item numbers are recommended part to stock for servicing.

COMMON PARTS

Order Code	Item	Date Begin	Date End	Part Number	Part Name	Qty. per Model/Kit
	C13	87-42		647925	Spring seat	1
	C14	87-42		762369	Cylinder block spring	1
	C15	87-42		647909	Spring retainer	1
	C16	87-42		9006250-0169	Retaining ring	1
	C20	87-42		706101	Piston assembly (SB1988-023)	9
	C30	87-42		735472	Slipper guide	1
	C40	87-42		321612	Slipper guide bearing	2
	C50	87-42		367631	Spacer	4
	C70	87-42		648477	Screw	4
	E10	96-03		501570	Side cover	1
	E10	92-16	96-02	506380	Side cover kit (SB-1992-008 & SB-1996-004)	1
	E20	87-42		731984	Leveler	1
	E22	87-42		720920	Spring seat	2
	E24	87-42		359034	Shim	2
	E30	96-07		11056529	Guide post	2
	E30	87-42	96-07	344465	Guide post (SB-1996-004)	2
	E40	87-42		517862	Seal nut	2
	E50	87-42		517376	O-ring	1
	E60	87-42		517229	Screw (SB-1994-018)	6
	E70	87-42		315325 (9005110-8700)	Plug assembly	1
	E80	87-42		332684	Spring	2
	E90	96-02		513885	Insert assembly (SB-1996-004 & SB-1999-041)	1

SPECIAL HARDWARE

FAB	B10	95-15		510142	Housing	1
	C05	87-42		763920	Cylinder block assembly without speed ring	1
	C80	87-42		11017476	Valve plate	1
	E82	87-42		706853	Spring	2
	QC04	87-42		510303 (80520S07)	Cylinder block kit	1

FAC	B10	95-15		510142	Housing (SB-1992-008 and SB-1995-006)	1
	C05	87-42		763920	Cylinder block assembly without speed ring	1
	C80	87-42		11015184	Valve plate	1
	E82	87-42		706853	Spring	2
	QC04	87-42		510303 (80520S07)	Cylinder block kit (SB-1993-012)	1

FAD	B10	95-15		510142	Housing (SB-1992-008 and SB-1995-006)	1
	C05	87-42		763920	Cylinder block assembly without speed ring	1
	C80	87-42		11015183	Valve plate	1
	E82	87-42		706853	Spring	2
	S07	87-42		510303 (80520S07)	Cylinder block kit (SB-1993-012)	1

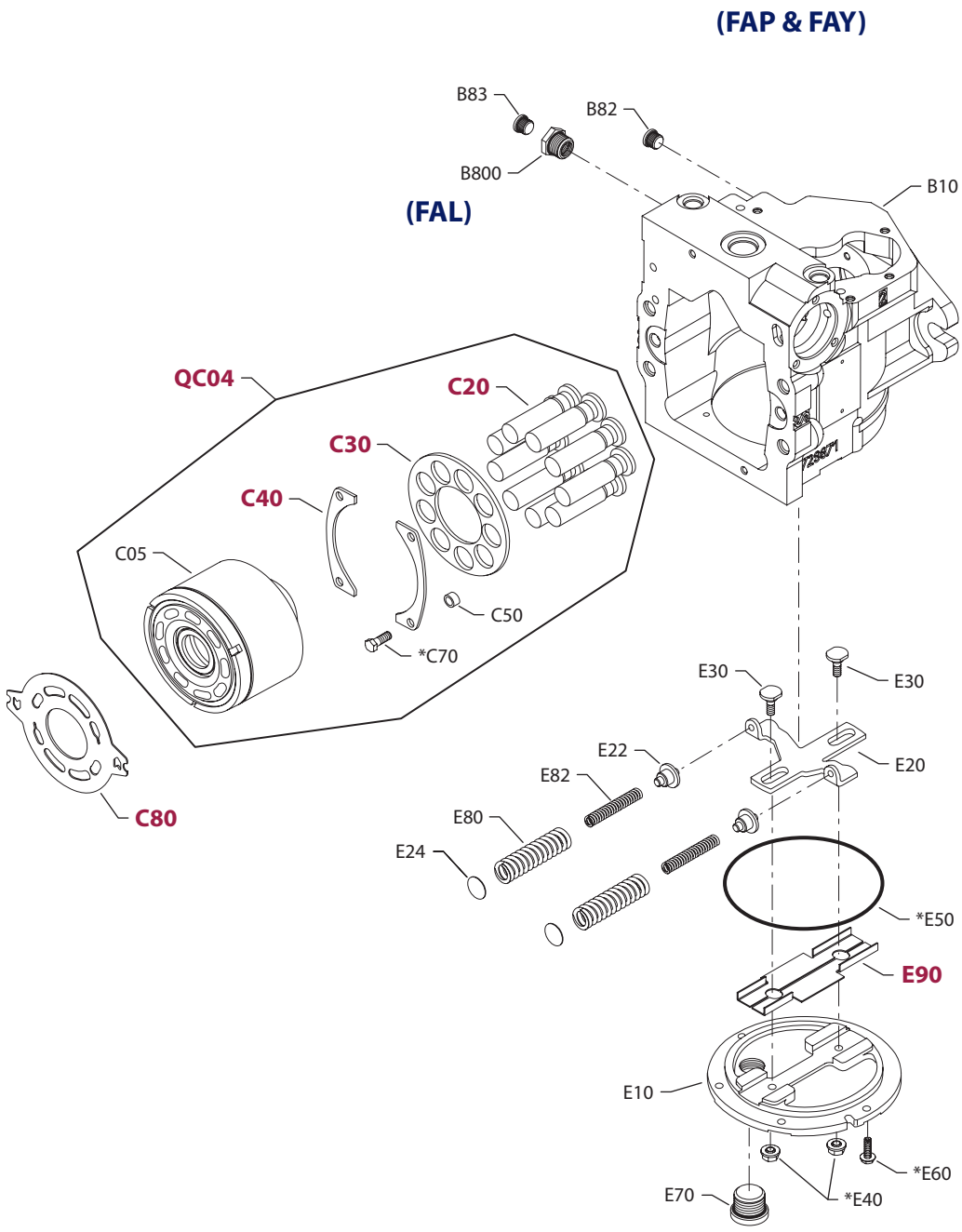

E100 869E

* = part included in overhaul seal kit Q210

Enlarged **bold** type item numbers are recommended part to stock for servicing.

COMMON PARTS

Order Code	Item	Date Begin	Date End	Part Number	Part Name	Qty. per Model/Kit
	C13	87-42		647925	Spring seat	1
	C14	87-42		762369	Cylinder block spring	1
	C15	87-42		647909	Spring retainer	1
	C16	87-42		9006250-0169	Retaining ring	1
	C20	87-42		706101	Piston assembly (SB1988-023)	9
	C30	87-42		735472	Slipper guide	1
	C40	87-42		321612	Slipper guide bearing	2
	C50	87-42		367631	Spacer	4
	C70	87-42		648477	Screw	4
	E10	96-03		501570	Side cover	1
	E10	92-16	96-02	506380	Side cover kit (SB-1992-008 & SB-1996-004)	1
	E20	87-42		731984	Leveler	1
	E22	87-42		720920	Spring seat	2
	E24	87-42		359034	Shim	2
	E30	96-07		11056529	Guide post	2
	E30	87-42	96-07	344465	Guide post (SB-1996-004)	2
	E40	87-42		517862	Seal nut	2
	E50	87-42		517376	O-ring	1
	E60	87-42		517229	Screw (SB-1994-018)	6
	E70	87-42		315325 (9005110-8700)	Plug assembly	1
	E80	87-42		332684	Spring	2
	E90	96-02		513885	Insert assembly (SB-1996-004 & SB-1999-041)	1

SPECIAL HARDWARE

FAL	B10	95-15		510143	Housing	1
	B82	95-15		140644	Plug assembly	1
	B83	95-15		140644	Plug assembly	1
	B800	95-15		519414	Reducer plug assembly	1
	C05	95-15		763920	Cylinder block assembly without speed ring	1
	C80	95-15		11017476	Valve plate	1
	E82	95-15		706853	Spring	2
	QC04	95-15		510303 (80520S07)	Cylinder block kit	1

FAP	B10	98-03		510142	Housing	1
	C05	98-03		763920	Cylinder block assembly without speed ring	1
	C80	98-03		11018107	Valve plate, CW	1
	E82	98-03		706853	Spring	2
	QC04	98-03		510303 (80520S07)	Cylinder block kit	1

FAY	B10	95-15		510142	Housing	1
	C05	87-42		763920	Cylinder block assembly without speed ring	1
	C80	87-42		11015183	Valve plate	1
	E82	87-42		706853	Spring	2
	QC04	87-42		510303 (80520S07)	Cylinder block kit	1

(FAZ)

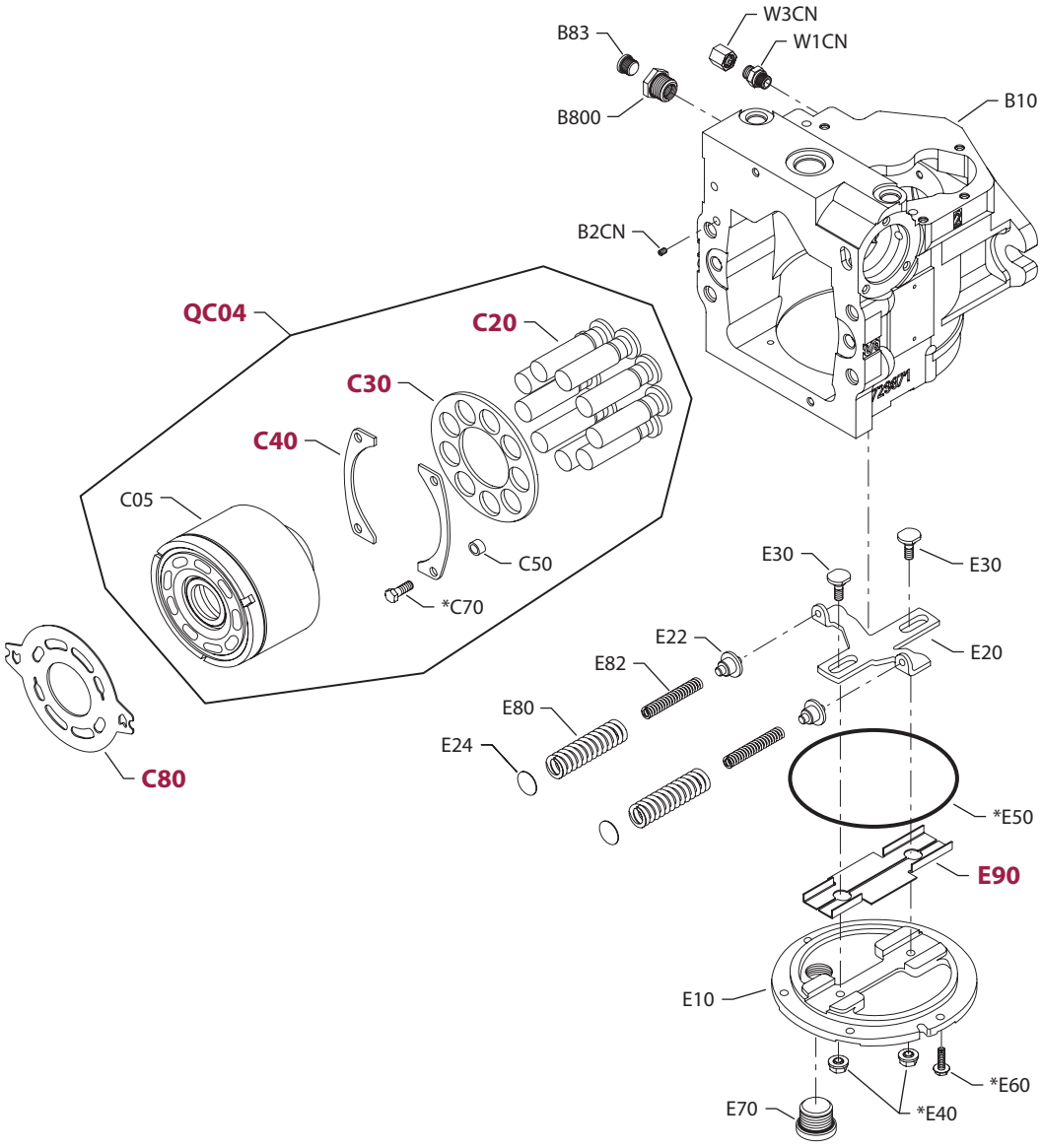

E101 853E

* = part included in overhaul seal kit Q210

Enlarged **bold** type item numbers are recommended part to stock for servicing.

SPECIAL HARDWARE

Order Code	Item	Date Begin	Date End	Part Number	Part Name	Qty. per Model/Kit
FAZ	B10	07-27		510143	Housing	1
	B2CN	07-27		775312	Set screw	1
	B83	07-27		140644	Plug assembly	1
	B800	07-27		519414	Reducer plug assembly	1
	C05	07-27		763920	Cylinder block assembly without speed ring	1
	C20	07-27		706101	Piston assembly	9
	C30	07-27		735472	Slipper guide	1
	C40	07-27		321612	Slipper guide bearing	2
	C50	07-27		367631	Spacer	4
	C70	07-27		648477	Screw	4
	C80	07-27		11015184	Valve plate	1
	E10	07-27		501570	Side cover	1
	E20	07-27		731984	Leveler	1
	E22	07-27		720920	Spring seat	2
	E24	07-27		359034	Shim	2
	E30	07-27		11056529	Guide post	2
	E40	07-27		517862	Seal nut	2
	E50	07-27		517376	O-ring	1
	E60	07-27		517229	Screw	6
	E70	07-27		315325 (9005110-8700)	Plug assembly	1
	E80	07-27		332684	Spring	2
	E82	07-27		706853	Spring	2
	E90	07-27		513885	Insert assembly	1
	QC04	07-27		510303 (80520S07)	Cylinder block kit	1
	W1CN	07-27		723726	Connector	1
	W3CN	07-27		574095	Cap	1

(GAA, GBA, GBE, GBH & GBV)

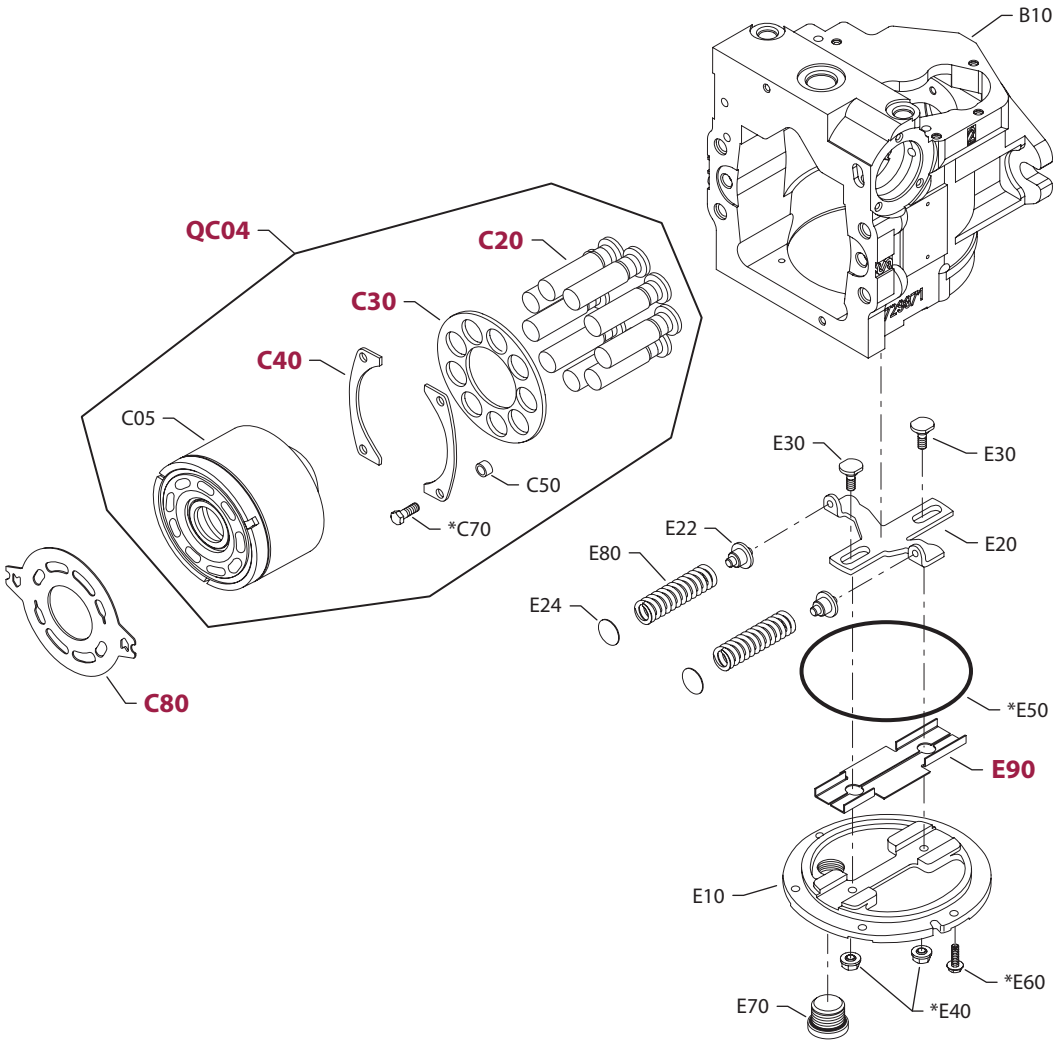

E100 870E

* = part included in overhaul seal kit Q210

Enlarged **bold** type item numbers are recommended part to stock for servicing.

COMMON PARTS

Order Code	Item	Date Begin	Date End	Part Number	Part Name	Qty. per Model/Kit
	C20	87-42		706101	Piston assembly (SB1988-023)	9
	C30	87-42		735472	Slipper guide	1
	C40	87-42		321612	Slipper guide bearing	2
	C50	87-42		367631	Spacer	4
	C70	87-42		648477	Screw	4
	E10	96-03		501570	Side cover	1
	E10	92-16	96-02	506380	Side cover kit (SB-1992-008 & SB-1996-004)	1
	E20	87-42		731984	Leveler	1
	E22	87-42		720920	Spring seat	2
	E24	87-42		359034	Shim	2
	E30	96-07		11056529	Guide post	2
	E30	87-42	96-07	344465	Guide post (SB-1996-004)	2
	E40	87-42		517862	Seal nut	2
	E50	87-42		517376	O-ring	1
	E60	87-42		517229	Screw (SB-1994-018)	6
	E70	87-42		315325 (9005110-8700)	Plug assembly	1
	E70A	87-42		001149 (9004201-6200)	O-ring	1
	E80	87-42		332684	Spring	2
	E90	96-02		513885	Insert assembly (SB-1996-004 & SB-1999-041)	1

SPECIAL HARDWARE

GAA	B10	87-42		510142	Housing (SB-1992-008 and SB-1995-006)	1
	C05	87-42		763920	Cylinder block assembly without speed ring	1
	C80	87-42		11017474	Valve plate	1
	QC04	87-42		510303 (80520S07)	Cylinder block kit (SB-1993-012)	1
GBA	B10	87-42		510142	Housing (SB-1992-008 and SB-1995-006)	1
	C05	87-42		763920	Cylinder block assembly without speed ring	1
	C80	87-42		11015183	Valve plate	1
	QC04	87-42		510303 (80520S07)	Cylinder block kit (SB-1993-012)	1
GBE	B10	94-45		510142	Housing (SB-1992-008 and SB-1995-006)	1
	C05	94-45		763920	Cylinder block assembly without speed ring	1
	C80	94-45		11015183	Valve plate	1
	QC04	94-45		510303 (80520S07)	Cylinder block kit (SB-1993-012)	1
GBH	B10	97-44		510144	Housing (SB-1992-008 and SB-1995-006)	1
	C05	97-44		763920	Cylinder block assembly without speed ring	1
	C80	97-44		11015183	Valve plate	1
	QC04	97-44		510303 (80520S07)	Cylinder block kit (SB-1993-012)	1
GBV	B10	00-13		510142	Housing (SB-1992-008 and SB-1995-006)	1
	C05	00-13		763920	Cylinder block assembly without speed ring	1
	C80	00-13		11015183	Valve plate	1
	QC04	00-13		510303 (80520S07)	Cylinder block kit (SB-1993-012)	1

(GCA, GCP, GLA, JCA & JCB)

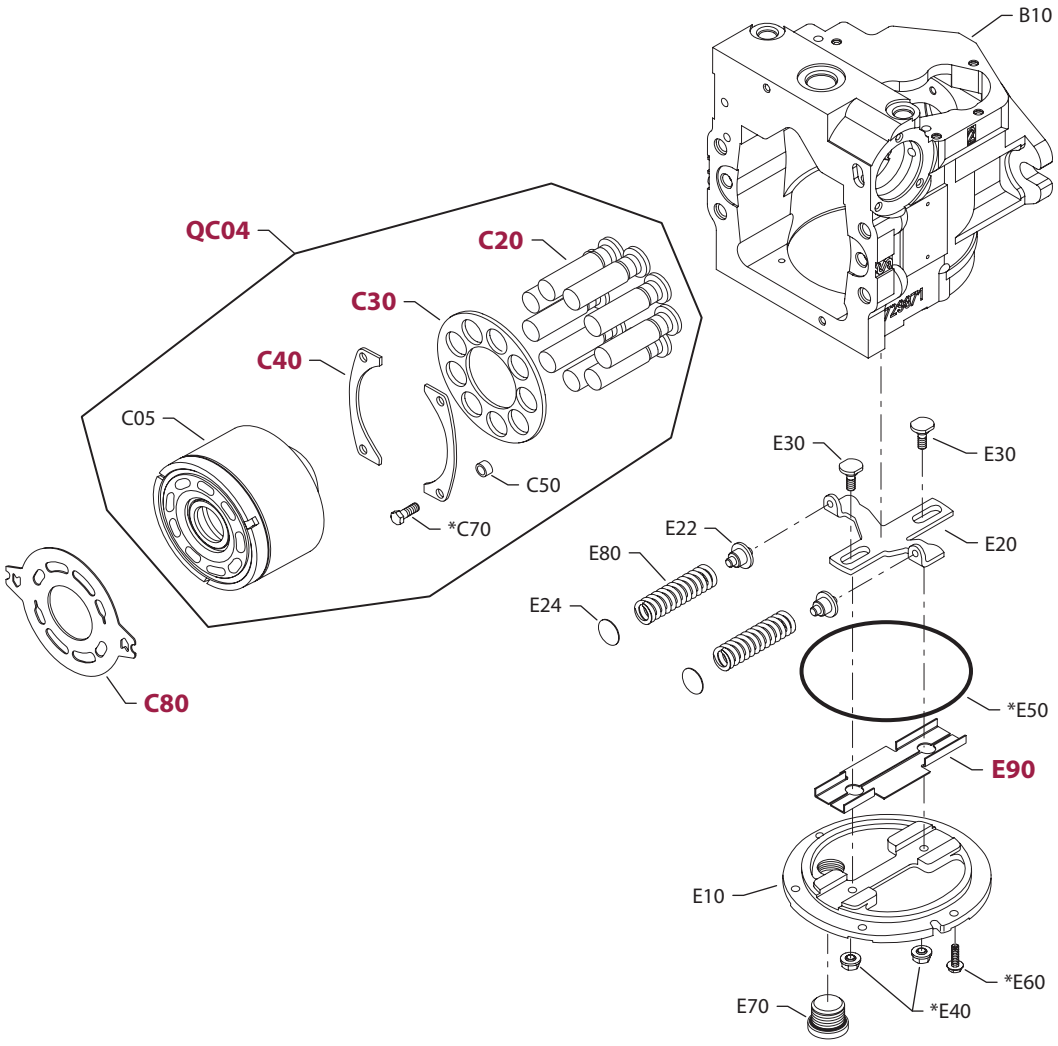

E100 870E

* = part included in overhaul seal kit Q210

Enlarged **bold** type item numbers are recommended part to stock for servicing.

COMMON PARTS

Order Code	Item	Date Begin	Date End	Part Number	Part Name	Qty. per Model/Kit
	C20	87-42		706101	Piston assembly (SB1988-023)	9
	C30	87-42		735472	Slipper guide	1
	C40	87-42		321612	Slipper guide bearing	2
	C50	87-42		367631	Spacer	4
	C70	87-42		648477	Screw	4
	E10	96-03		501570	Side cover	1
	E10	92-16	96-02	506380	Side cover kit (SB-1992-008 & SB-1996-004)	1
	E20	87-42		731984	Leveler	1
	E22	87-42		720920	Spring seat	2
	E24	87-42		359034	Shim	2
	E30	96-07		11056529	Guide post	2
	E30	87-42	96-07	344465	Guide post (SB-1996-004)	2
	E40	87-42		517862	Seal nut	2
	E50	87-42		517376	O-ring	1
	E60	87-42		517229	Screw (SB-1994-018)	6
	E70	87-42		315325 (9005110-8700)	Plug assembly	1
	E70A	87-42		001149 (9004201-6200)	O-ring	1
	E80	87-42		332684	Spring	2
	E90	96-02		513885	Insert assembly (SB-1996-004 & SB-1999-041)	1

SPECIAL HARDWARE

GCA	B10	95-14		510142	Housing (SB-1992-008 and SB-1995-006)	1
	C05	87-42		763920	Cylinder block assembly without speed ring	1
	C80	87-42		11015184	Valve plate	1
	QC04	87-42		510303 (80520S07)	Cylinder block kit (SB-1993-012)	1
GCP	B10	95-14		510142	Housing	1
	C05	95-14		763920	Cylinder block assembly without speed ring	1
	C80	95-14		11015184	Valve plate	1
	QC04	95-14		510303 (80520S07)	Cylinder block kit	1
GLA	B10	98-04		510142	Housing	1
	C05	98-04		763920	Cylinder block assembly without speed ring	1
	C80	98-04		11018107	Valve plate, CW	1
	C80	98-04		11018106	Valve plate, CCW	1
	QC04	98-04		510303 (80520S07)	Cylinder block kit	1
JCA	B10	08-12		510142	Housing	1
	C05	08-12		763920	Cylinder block assembly without speed ring	1
	C80	08-12		11015183	Valve plate	1
	QC04	08-12		510303 (80520S07)	Cylinder block kit	1
JCB	B10	09-14		510142	Housing	1
	C05	09-14		763920	Cylinder block assembly without speed ring	1
	C80	09-14		11015183	Valve plate	1
	QC04	09-14		510303 (80520S07)	Cylinder block kit	1

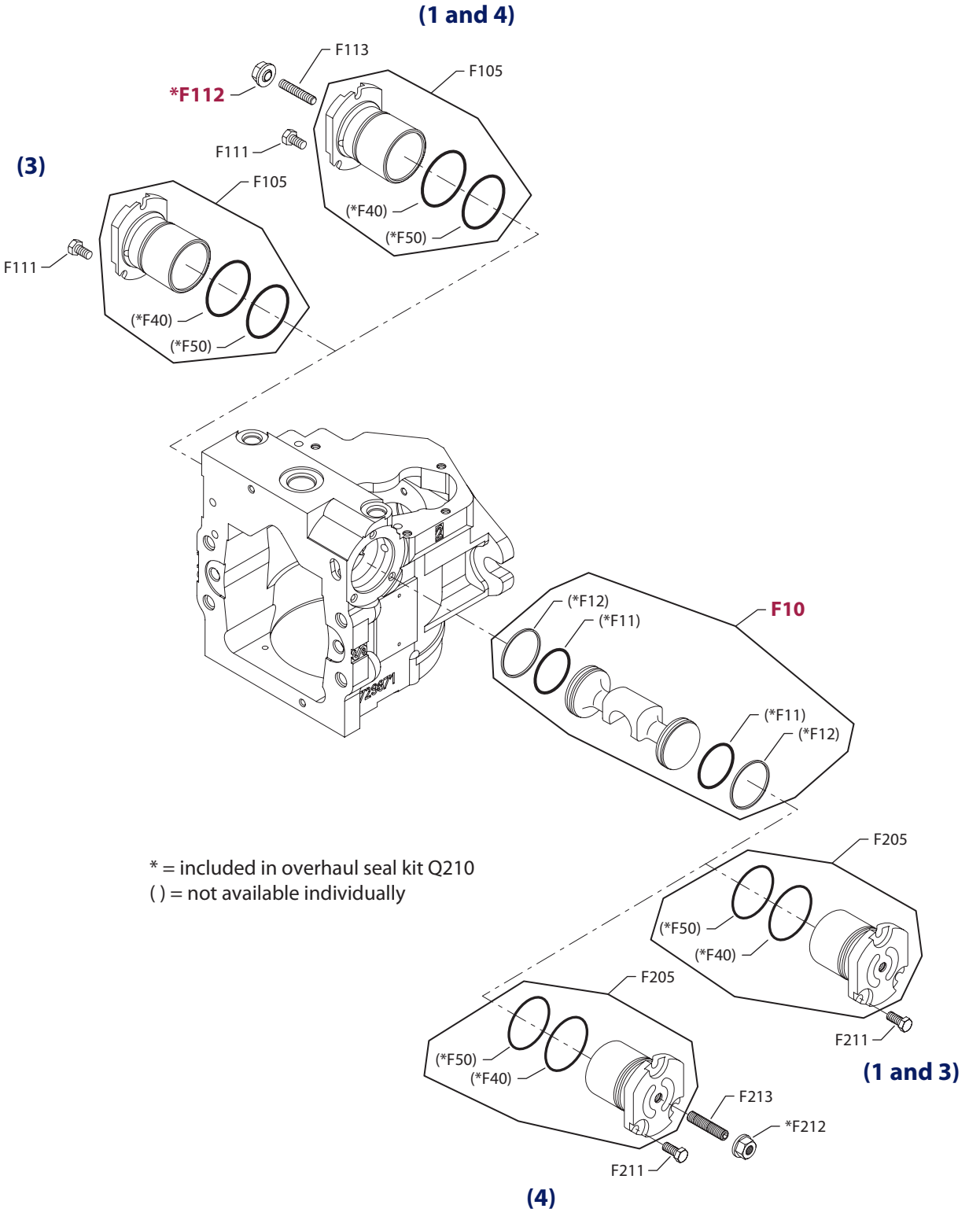

* = included in overhaul seal kit Q210
( ) = not available individually

E100 688E

Enlarged **bold** type item numbers are recommended part to stock for servicing.

DISPLACEMENT LIMITATION

Order Code	Item	Date Begin	Date End	Part Number	Part Name	Qty. per Model/Kit
1	F10	01-01		11046683	Servo piston assembly	1
	F105	01-01		11060702	Servo sleeve kit, adjustable	1
	F111	01-01		508438	Screw	3
	F112	01-01		505412 (9003509-0008)	Seal nut	1
	F113	01-01		5000747	Set screw	1
	F205	01-01		11059758	Servo sleeve kit, non-adjustable	1
	F211	01-01		508438	Screw	3
3		87-42	90-50	8510089	Servo sleeve/piston replacement kit (SB-1995-005)	1
	F10	90-51		11046683	Servo piston assembly	1
	F105	90-51		11059758	Servo sleeve assembly, non-adjustable	1
	F111	87-42		508438	Screw	3
	F205	90-51		11059758	Servo sleeve assembly, non-adjustable	1
	F211	87-42		508438	Screw	3
4		87-42	90-50	8510090	Servo sleeve/piston replacement kit (SB-1995-005)	1
	F10	90-51		11046683	Servo piston assembly	1
	F105	90-51		11060702	Servo sleeve assembly, adjustable	1
	F111	87-42		508438	Screw	3
	F112	87-42		505412 (9003509-0008)	Seal nut	1
	F113	87-42		5000747	Set screw	1
	F205	90-51		11060702	Servo sleeve assembly, adjustable	1
	F211	87-42		508438	Screw	3
	F212	87-42		505412 (9003509-0008)	Seal nut	1
	F213	87-42		5000747	Set screw	1

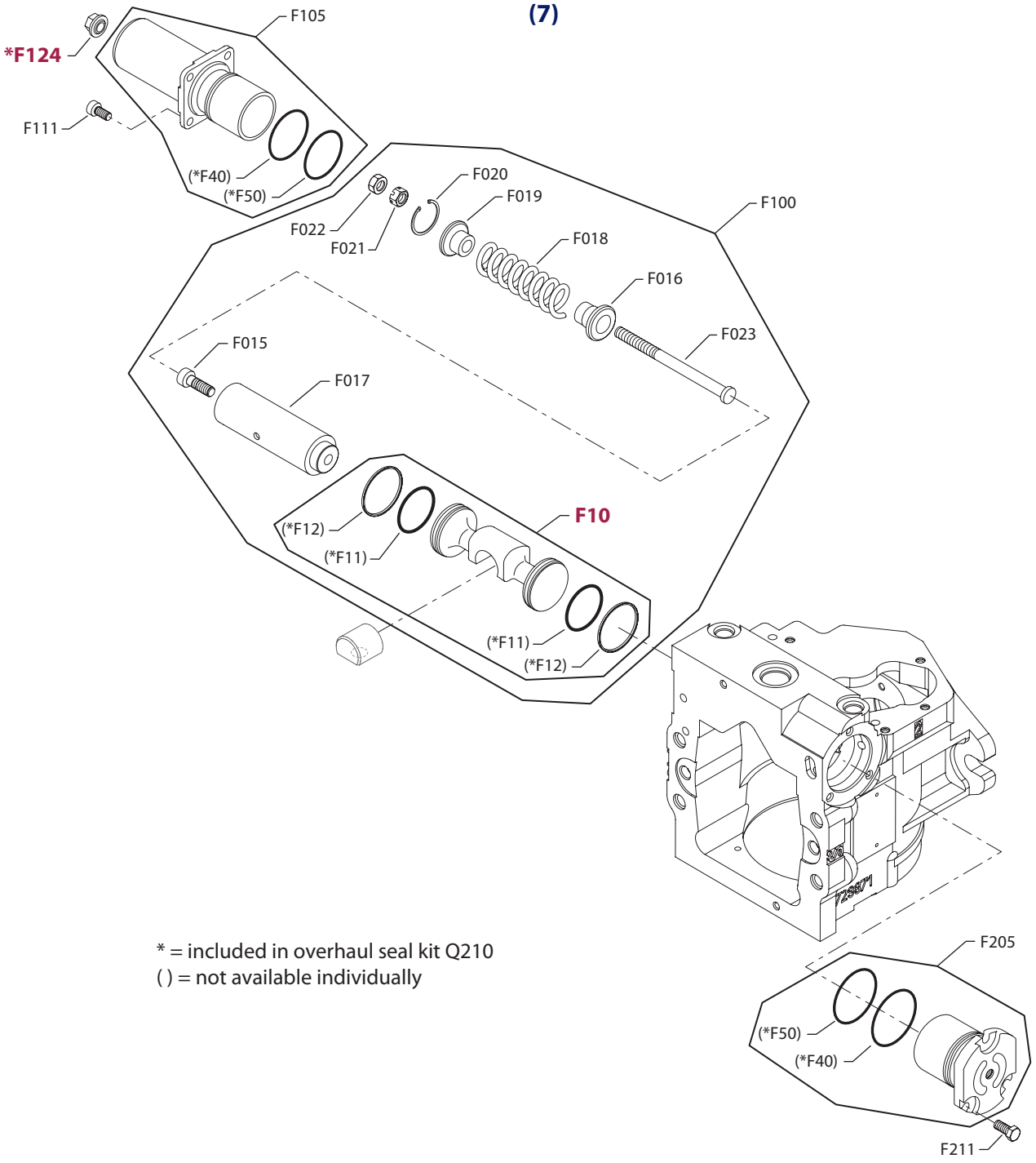

* = included in overhaul seal kit Q210
( ) = not available individually

E101 854E

Enlarged **bold** type item numbers are recommended part to stock for servicing.

DISPLACEMENT LIMITATION

Order Code	Item	Date Begin	Date End	Part Number	Part Name	Qty. per Model/Kit
7	F10	96-20		11046684	Servo piston assembly	1
	F015	96-20		345496	Screw	1
	F016	96-20		507098	Spring guide	1
	F017	96-20		345413	Spring housing	1
	F018	96-20		351791	Spring	1
	F019	96-20		507097	Spring guide	1
	F020	96-20		070169	Retaining ring	1
	F021	96-20		507044	Castle nut	1
	F022	96-20		345470	Hex nut	1
	F023	96-20		345488	Adjust screw	1
	F100	96-20		513979	Servo assembly	1
	F105	96-20		11060671	Servo cylinder assembly, NFPE	1
	F111	96-20		503674	Screw	3
	F124	96-20		612291	Seal nut, M12	1
	F205	96-20		11059758	Servo cylinder assembly, non-adjustable	1
	F211	96-20		508438	Screw	3

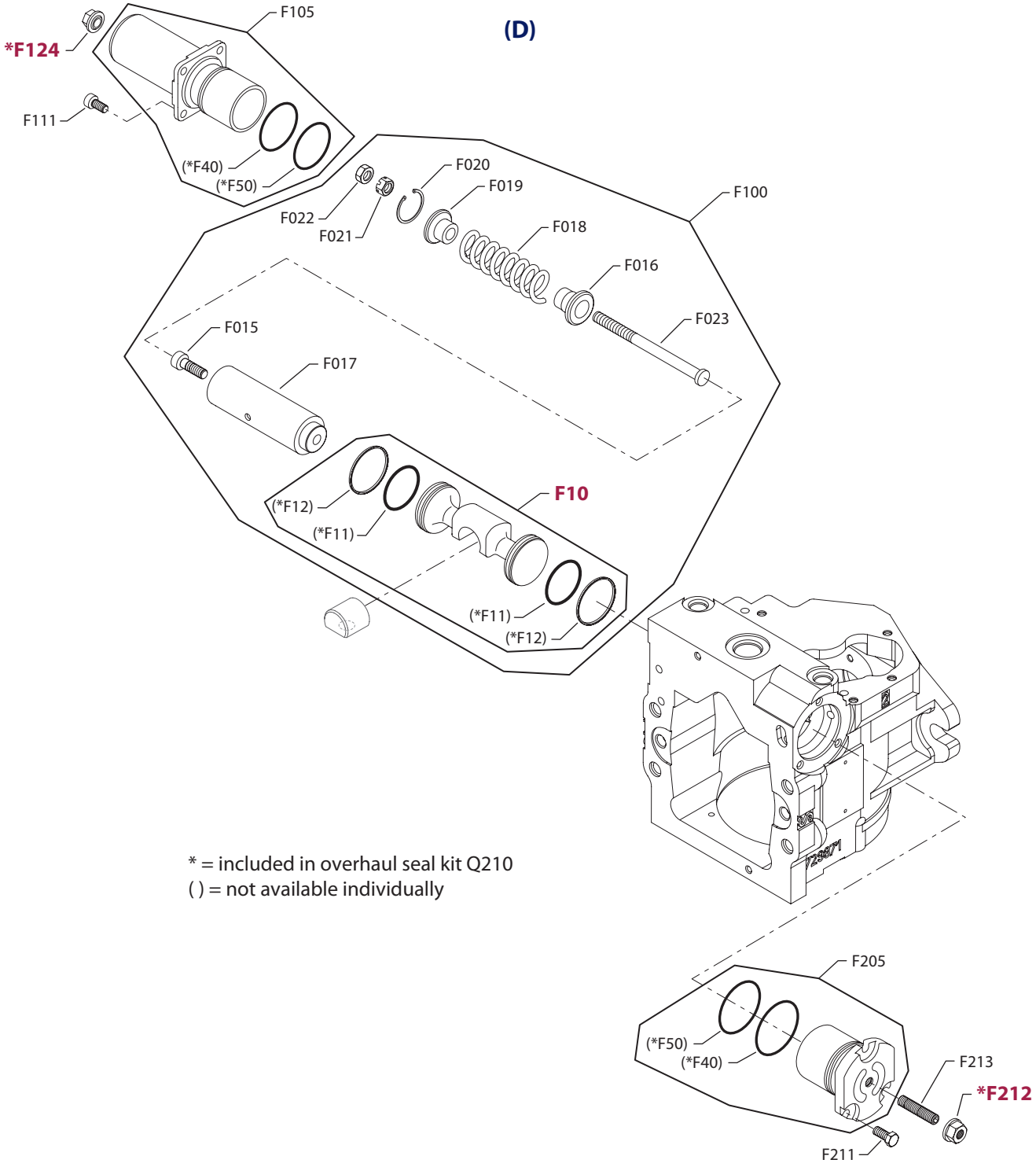

* = included in overhaul seal kit Q210
( ) = not available individually

E101 855E

Enlarged **bold** type item numbers are recommended part to stock for servicing.

DISPLACEMENT LIMITATION

Order Code	Item	Date Begin	Date End	Part Number	Part Name	Qty. per Model/Kit
D	F10	02-51		11046684	Servo piston assembly	1
	F015	02-51		345496	Screw	1
	F016	02-51		507098	Spring guide	1
	F017	02-51		345413	Spring housing	1
	F018	02-51		351791	Spring	1
	F019	02-51		507097	Spring guide	1
	F020	02-51		070169	Retaining ring	1
	F021	02-51		507044	Castle nut	1
	F022	02-51		345470	Hex nut	1
	F023	02-51		345488	Adjust screw	1
	F100	02-51		513979	Servo assembly	1
	F105	02-51		11060671	Servo cylinder assembly, NFPE	1
	F111	02-51		503674	Screw	3
	F124	02-51		612291	Seal nut, M12	1
	F205	02-51		11060702	Servo cylinder assembly, non-adjustable	1
	F211	02-51		508438	Screw	3
	F212	02-51		505412	Seal nut	1
	F213	02-51		5000747	Set screw, M8 x 45	1

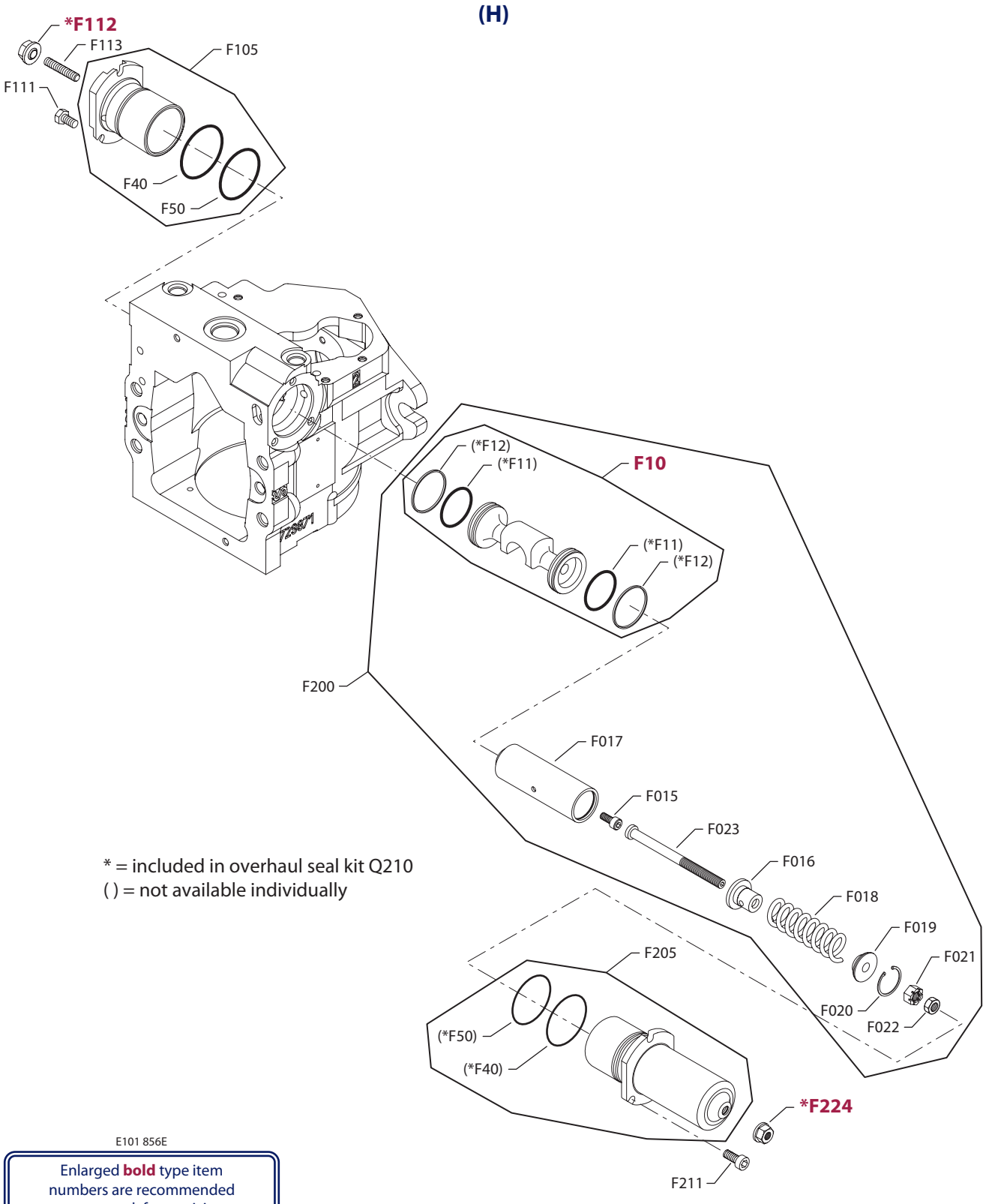

* = included in overhaul seal kit Q210
( ) = not available individually

E101 856E

Enlarged **bold** type item numbers are recommended part to stock for servicing.

DISPLACEMENT LIMITATION

Order Code	Item	Date Begin	Date End	Part Number	Part Name	Qty. per Model/Kit
H	F10	98-18		11046684	Servo piston assembly	1
	F015	98-18		345496	Screw	1
	F016	98-18		507098	Spring guide	1
	F017	98-18		345413	Spring housing	1
	F018	98-18		351791	Spring	1
	F019	98-18		507097	Spring guide	1
	F020	98-18		070169	Retaining ring	1
	F021	98-18		507044	Castle nut	1
	F022	98-18		345470	Hex nut	1
	F023	98-18		345488	Adjust screw	1
	F105	98-18		11060702	Servo cylinder assembly, non-adjustable	1
	F111	98-18		508438	Screw	3
	F112	98-18		505412	Seal nut	1
	F113	98-18		5000747	Set screw, M8 x 45	1
	F200	98-18		513979	Servo assembly	1
	F205	98-18		11060671	Servo cylinder assembly, NFPE	1
	F211	98-18		503674	Screw	3
	F224	98-18		612291	Seal nut, M12	1

(P)

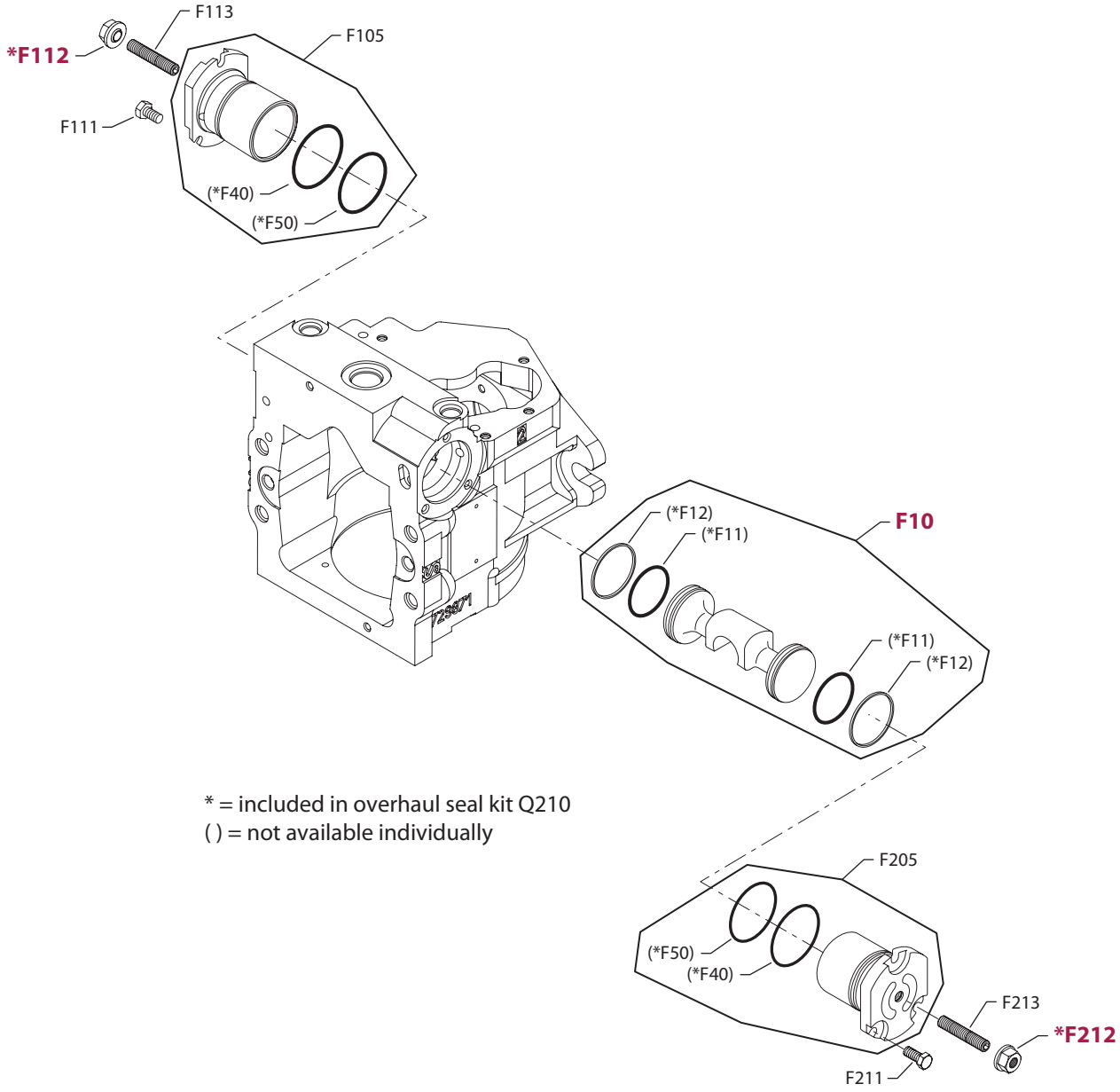

* = included in overhaul seal kit Q210
( ) = not available individually

E101 857E

Enlarged **bold** type item numbers are recommended part to stock for servicing.

DISPLACEMENT LIMITATION

Order Code	Item	Date Begin	Date End	Part Number	Part Name	Qty. per Model/Kit
P	F10	02-06		11046683	Servo piston assembly	1
	F105	02-06		11060702	Servo sleeve assembly, adjustable	1
	F111	02-06		508438	Screw	3
	F112	02-06		505412 (9003509-0008)	Seal nut	1
	F113	02-06		719401	Set screw, M8 x 50	1
	F205	02-06		11060702	Servo sleeve assembly, adjustable	1
	F211	02-06		508438	Screw	3
	F212	02-06		505412 (9003509-0008)	Seal nut	1
	F213	02-06		719401	Set screw, M8 x 50	1

(80)

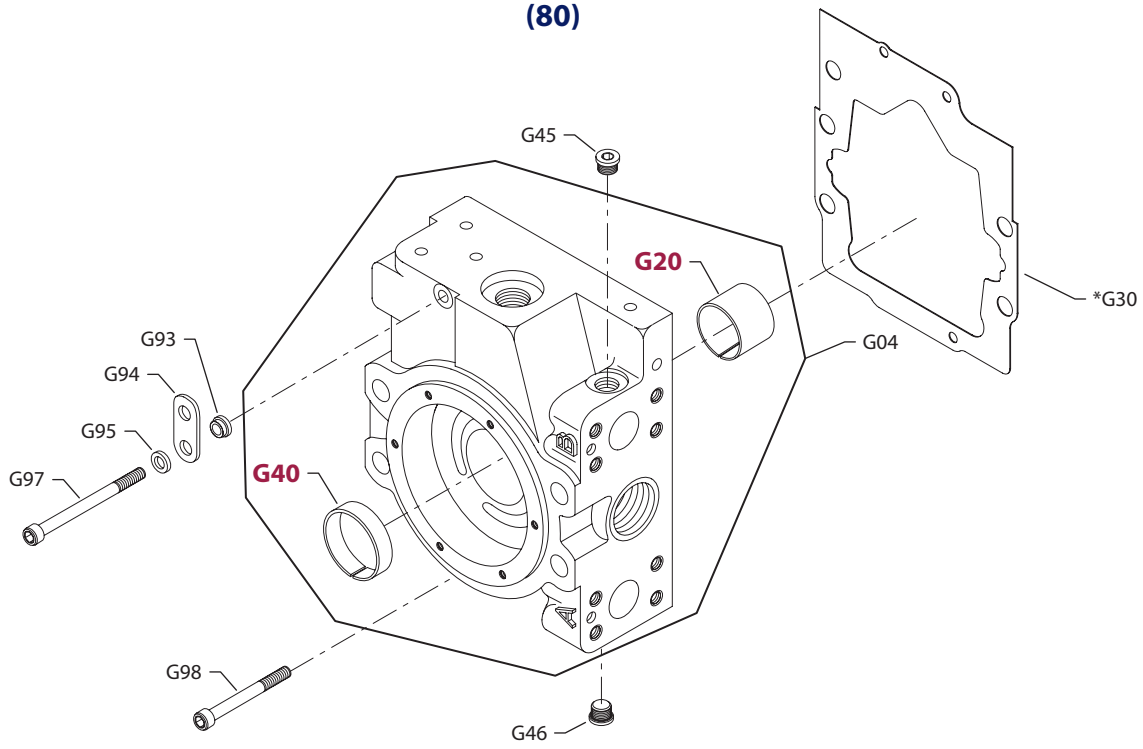

(84)

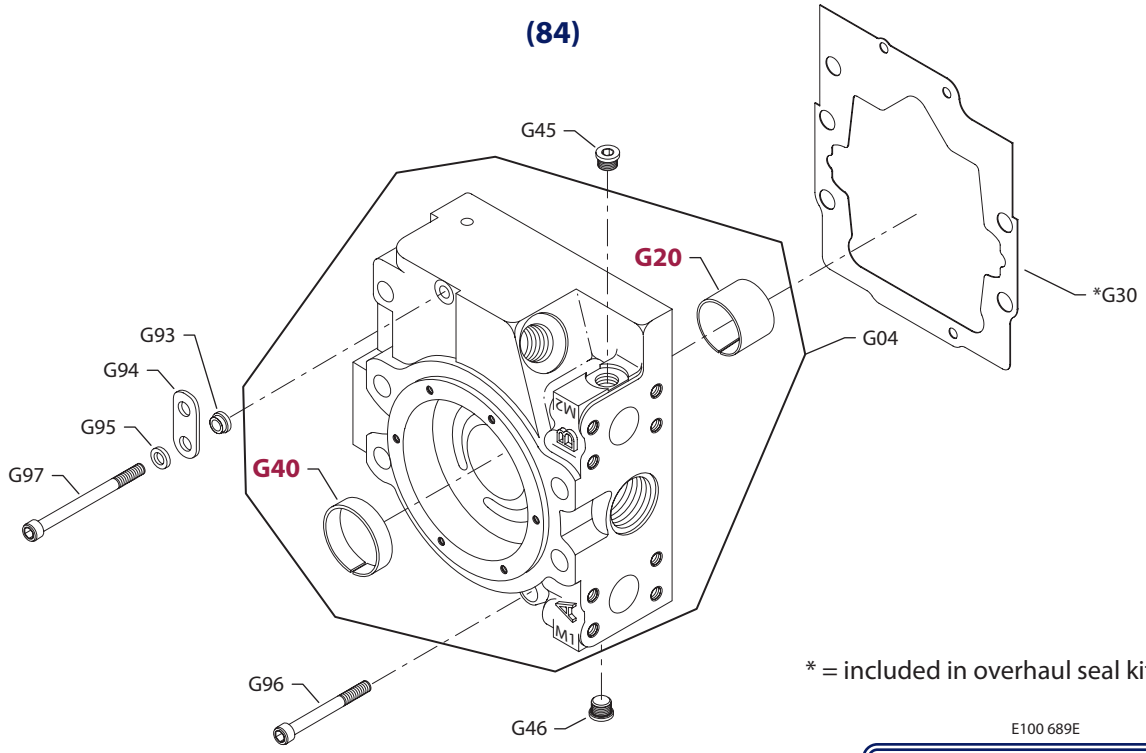

* = included in overhaul seal kit Q210

E100 689E

Enlarged **bold** type item numbers are recommended part to stock for servicing.

END CAP

Order Code	Item	Date Begin	Date End	Part Number	Part Name	Qty. per Model/Kit
80	G04	92-16		506785	End cap, twin ports (SB-1995-006)	1
	G20	92-16		343830	Jounal bearing (SB-1992-008)	1
	G20	87-42	92-15	648030	Jounal bearing	1
	G30	89-17		512833	End cap gasket	1
	G40	87-42		648055	Bushing	1
	G45	89-17		140644	Plug assembly	1
	G46	89-17		140644	Plug assembly	1
	G93	89-17		511930	Spacer	1
	G94	89-17		713818 (8800565)	Lifting bracket	1
	G95	89-17		086637	Washer	1
	G97	92-16		511937	Screw	1
	G97	89-17	92-15	508994	Screw	1
	G98	89-17		354407	Screw	1\
84	G04	04-48		506786	End cap, twin ports	1
	G20	04-48		343830	Jounal bearing	1
	G30	04-48		512833	End cap gasket	1
	G40	04-48		648055	Bushing	1
	G45	04-48		140644	Plug assembly	1
	G46	04-48		140644	Plug assembly	1
	G93	04-48		511930	Spacer	1
	G94	04-48		713818 (8800565)	Lifting bracket	1
	G95	04-48		086637	Washer	1
	G96	04-48		354407	Screw	1
	G97	04-48		511937	Screw	1

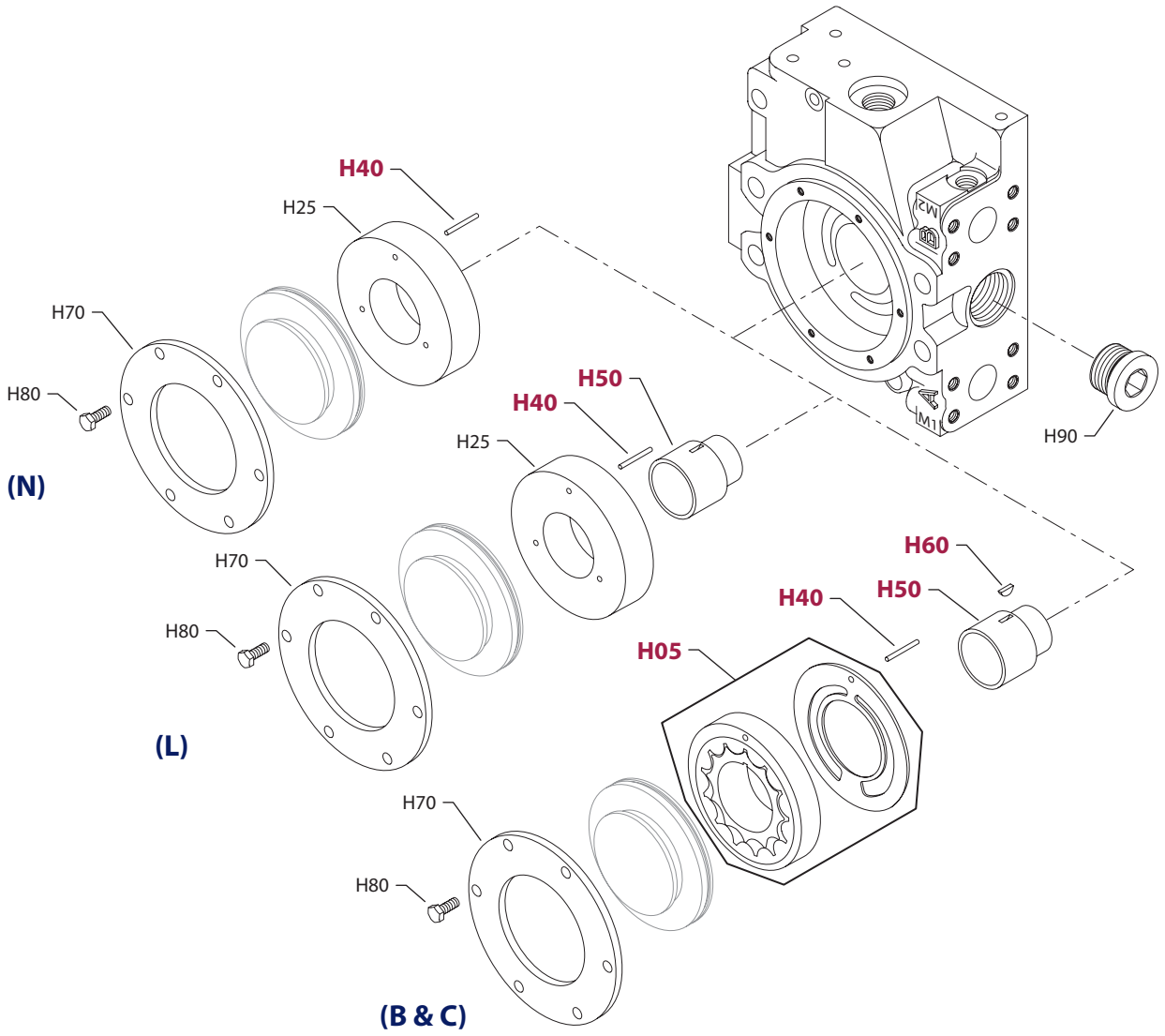

E100 690E

Enlarged **bold** type item numbers are recommended part to stock for servicing.

CHARGING SYSTEM

Order Code	Item	Date Begin	Date End	Part Number	Part Name	Qty. per Model/Kit
B	H05	92-16		501990	Charge pump set, 11 cc (SB-1995-004)	1
	H40	87-42		9004875-0013	Pin	1
	H50	92-16		513438	Charge pump shaft (SB-1995-002 & SB-1997-014)	1
	H50	87-42	92-15	715243	Charge pump shaft (SB-1992-008)	1
	H60	92-16		9003310-1206	Key (SB-1995-002)	1
	H70	88-27		516761	Retaining plate	1
	H80	88-27		648451	Screw	6
C	H05	92-16		501991	Charge pump set, 14 cc (SB-1995-004)	1
	H40	87-42		9004875-0013	Pin	1
	H50	92-16		513438	Charge pump shaft (SB-1995-002 & SB-1997-014)	1
	H50	87-42	92-15	715243	Charge pump shaft (SB-1992-008)	1
	H60	92-16		9003310-1206	Key (SB-1995-002)	1
	H70	88-27		516761	Retaining plate	1
	H80	88-27		648451	Screw	6
L	H25	92-16		11077864	Charge pump spacer	1
	H40	09-47		9004875-013	Pin	1
	H50	92-16		513438	Charge pump shaft (SB-1995-002 & SB-1997-014)	1
	H50	87-42	92-15	715243	Charge pump shaft (SB-1992-008)	1
	H70	88-27		516761	Retaining plate	1
	H80	88-27		648451	Screw	6
	H90	88-27		664524 (9005110-9000)	Plug assembly	1
N	H25	92-16		11077864	Charge pump spacer	1
	H40	09-47		9004875-0013	Pin	1
	H70	88-27		516761	Retaining plate	1
	H80	88-27		648451	Screw	6
	H90	88-27		664524 (9005110-9000)	Plug assembly	1

(AB & AC)

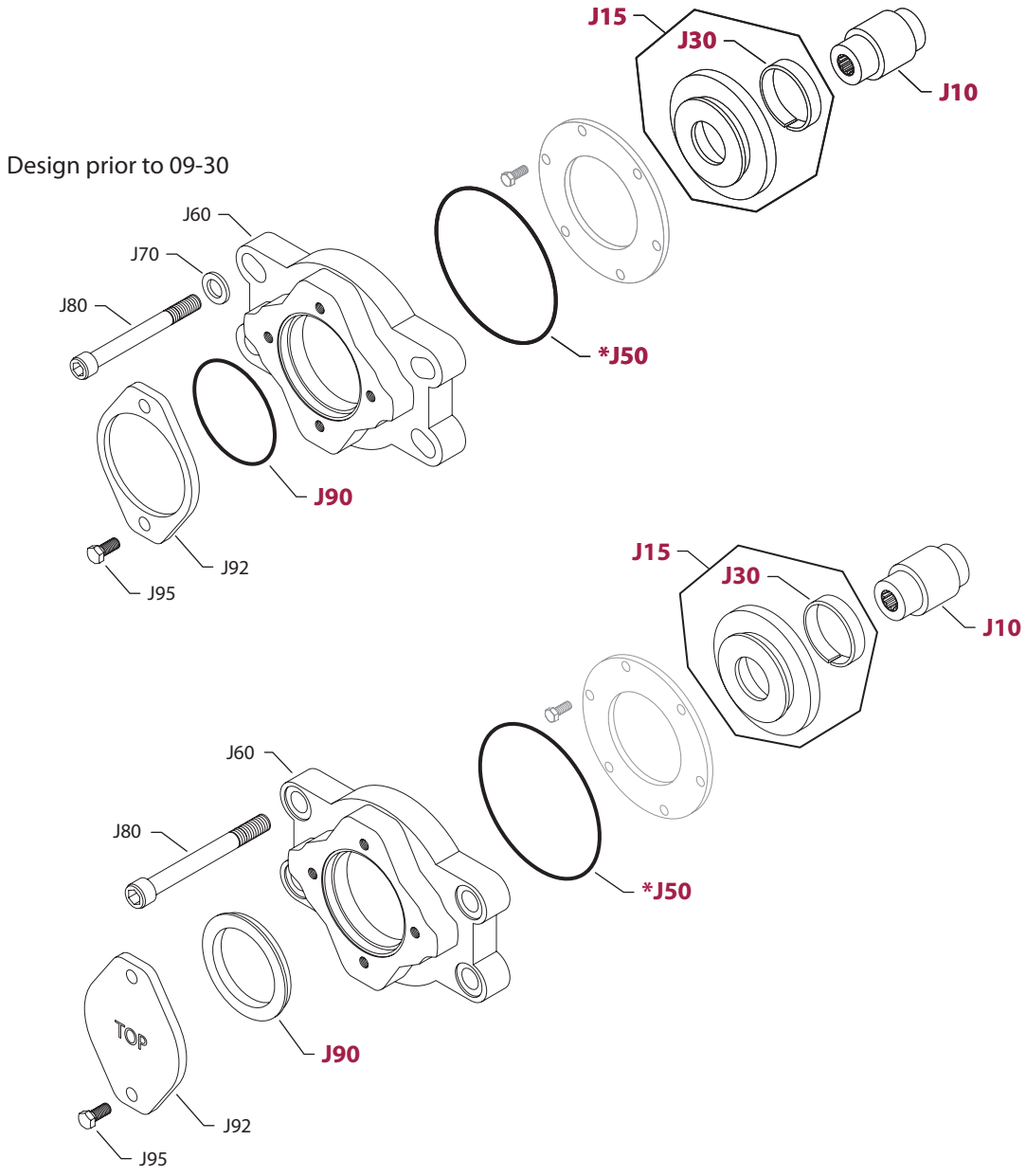

∗ = icluded in overhaul seal kit Q210

E100 691E

Enlarged **bold** type item numbers are recommended part to stock for servicing.

AUXILIARY MOUNTING

Order Code	Item	Date Begin	Date End	Part Number	Part Name	Qty. per Model/Kit
AB	J10	92-16		341016	Coupling, 9 tooth (SB-1992-008)	1
	J15	92-16		8800832	Cover assembly, CW (SB-1995-004 & SB-2005-011)	1
	J15	92-16		8800833	Cover assembly, CCW (SB-1995-004 & SB-2005-011)	1
	J30	92-16		664771 (8700008)	Bushing (SB-1992-008)	1
	J30	87-42	92-15	648055	Bushing	1
	J40	87-42	92-15	680892 (9004104-0440)	O-ring (SB-1992-008)	1
	J50	87-42		056739 (9004104-1580)	O-ring	1
	J60	09-30		520944	Flange adapter (SB-1995-006 & SB-2009-074)	1
	J70	95-15	09-30	506753	Washer (SB-2009-074)	4
	J70	87-42	95-14	294462	Washer, hardened (SB-1995-006)	4
	J80	95-15		507585	Screw, M12 x 110	4
	J80	87-42	95-14	321893	Screw, M10 x 110	4
	J90	09-30		4800482	A pad seal (SB-2009-074)	1
	J90	87-42	09-29	726950 (9004104-0420)	O-ring	1
	J92	09-30		4460586	Cover plate	1
	J92	87-42	09-29	9802336	Cover plate (SB-2009-074)	1
	J95	87-42		9007200-3714	Screw	2
AC	J10	93-47		11053277	Coupling, 11 tooth	1
	J15	92-16		8800832	Cover assembly, CW (SB-1995-004 & SB-2005-011)	1
	J15	92-16		8800833	Cover assembly, CCW (SB-1995-004 & SB-2005-011)	1
	J30	92-16		664771 (8700008)	Bushing (SB-1992-008)	1
	J30	93-47	92-15	648055	Bushing	1
	J40	93-47	92-15	680892 (9004104-0440)	O-ring (SB-1992-008)	1
	J50	93-47		056739 (9004104-1580)	O-ring	1
	J60	09-30		520944	Flange adapter (SB-1995-006 & SB-2009-074)	1
	J70	95-15	09-30	506753	Washer (SB-2009-074)	4
	J70	93-47	95-14	294462	Washer, hardened (SB-1995-006)	4
	J80	95-15		507585	Screw, M12 x 110	4
	J80	93-47	95-14	321893	Screw, M10 x 110	4
	J90	09-30		4800482	A pad seal (SB-2009-074)	1
	J90	93-47	09-29	726950 (9004104-0420)	O-ring	1
	J92	09-30		4460586	Cover plate	1
	J92	93-47	09-29	9802336	Cover plate (SB-2009-074)	1
	J95	93-47		9007200-3714	Screw	2

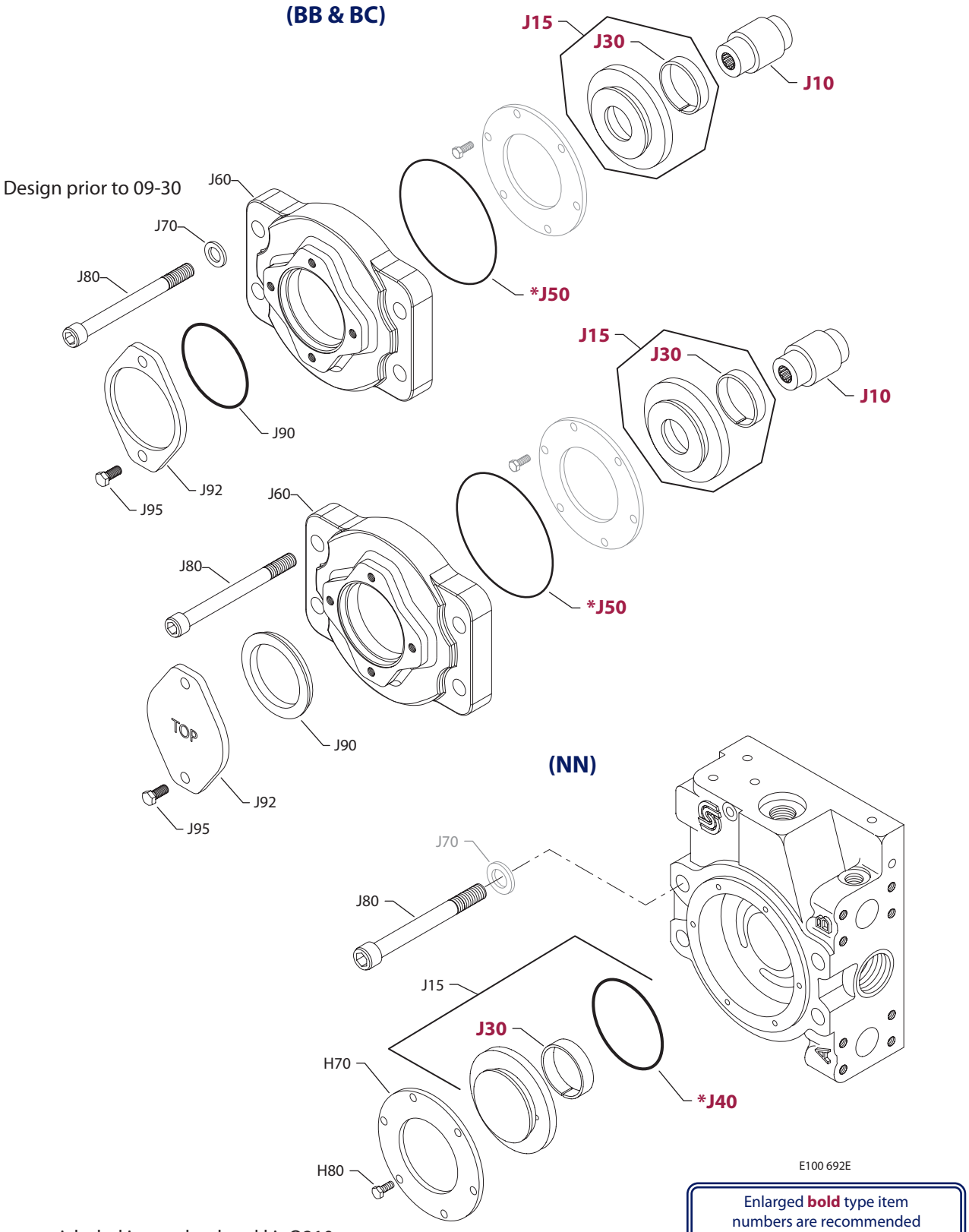

∗ = icluded in overhaul seal kit Q210

Enlarged **bold** type item numbers are recommended part to stock for servicing.

AUXILIARY MOUNTING

Order Code	Item	Date Begin	Date End	Part Number	Part Name	Qty. per Model/Kit
BB	J10	92-16		11053280	Coupling, 15 tooth	1
	J15	92-16		8800832	Cover assembly, CW (SB-1995-004 & SB-2005-011)	1
	J15	92-16		8800833	Cover assembly, CCW (SB-1995-004 & SB-2005-011)	1
	J30	92-16		664771 (8700008)	Bushing (SB-1992-008)	1
	J30	87-42	92-15	648055	Bushing	1
	J40	87-42	92-15	680892 (9004104-0440)	O-ring (SB-1992-008)	1
	J50	87-42		056739 (9004104-1580)	O-ring	1
	J60	09-30		520945	Flange adaptor (SB-1995-006 & SB-2009-075)	1
	J70	95-15	09-30	506753	Washer	4
	J70	87-42	95-14	294462	Washer, hardened (SB-1995-006)	4
	J80	95-15		507585	Screw, M12 x 110	4
	J80	87-42	95-14	321893	Screw, M10 x 110	4
	J90	09-30		8801061	B pad seal (SB-2009-075)	1
	J90	87-42	09-29	726935 (9004104-0450)	O-ring	1
	J92	09-30		8801059	Cover	1
	J92	87-42	09-29	4460370	Cover plate	1
	J95	87-42		9007200-5021	Screw	2
BC	J10	92-16		341024	Coupling, 13 tooth	1
	J15	92-16		8800832	Cover assembly, CW (SB-1995-004 & SB-2005-011)	1
	J15	92-16		8800833	Cover assembly, CCW (SB-1995-004 & SB-2005-011)	1
	J30	92-16		664771 (8700008)	Bushing (SB-1992-008)	1
	J30	87-42	92-15	648055	Bushing	1
	J40	87-42	92-15	680892 (9004104-0440)	O-ring (SB-1992-008)	1
	J50	87-42		056739 (9004104-1580)	O-ring	1
	J60	09-30		520945	Flange adaptor (SB-1995-006 & SB-2009-075)	1
	J70	95-15	09-30	506753	Washer	4
	J70	87-42	95-14	294462	Washer, hardened (SB-1995-006)	4
	J80	95-15		507585	Screw, M12 x 110	4
	J80	87-42	95-14	321893	Screw, M10 x 110	4
	J90	09-30		8801061	B pad seal (SB-2009-075)	1
	J90	87-42	09-29	726935 (9004104-0450)	O-ring	1
	J92	09-30		8801059	Cover	1
	J92	87-42	09-29	4460370	Cover plate	1
	J95	87-42		9007200-5021	Screw	2
NN	J15	92-16		8800834	Cover assembly, (SB-1995-004)	1
	J30	92-16		664771 (8700008)	Bushing (SB-1992-008)	1
	J30	87-42	92-15	648055	Bushing	1
	J40	87-42		680892 (9004104-0440)	O-ring (SB-1992-008)	1
	J70	87-42	95-14	294462	Washer (SB-1995-006)	4
	J80	95-15		506800	Screw, M12 x 110	4
	J80	87-42	95-14	321661	Screw, M10 x 110	4

(10-42)

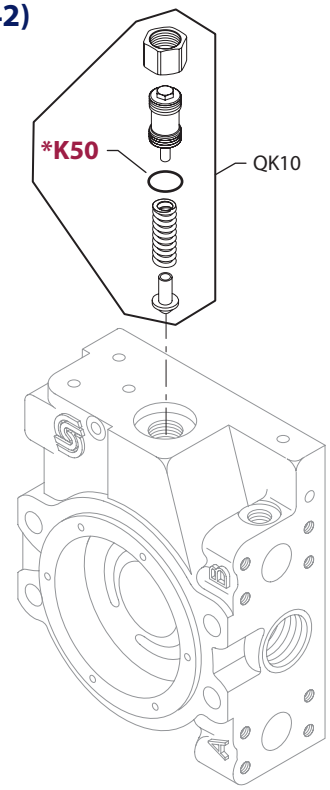

(C3 & C5)

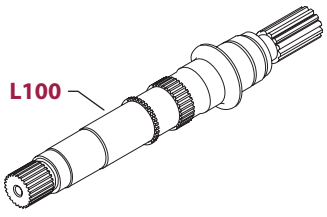

(T3)

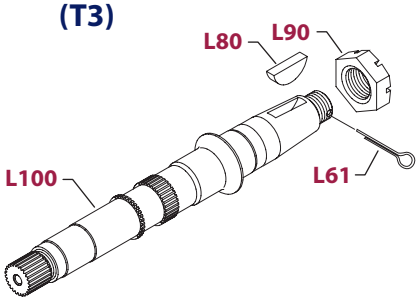

(T8)

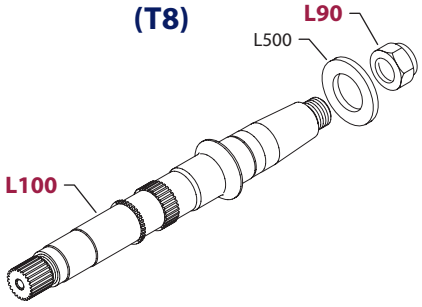

(TL)

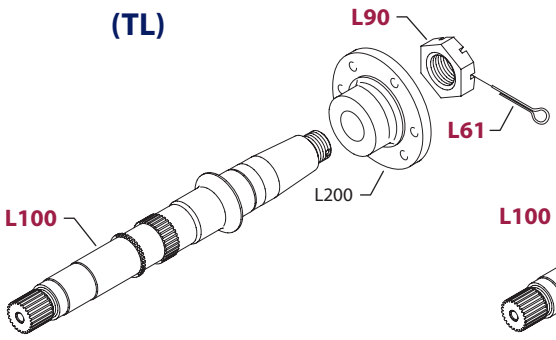

(TB)

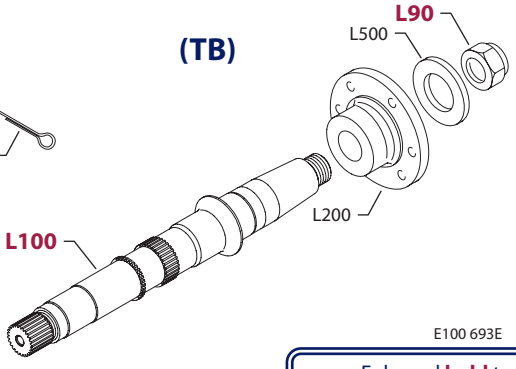

E100 693E

Enlarged **bold** type item numbers are recommended part to stock for servicing.

∗ = icluded in overhaul seal kit Q210

CHARGE PRESSURE SETTING

Order Code	Item	Date Begin	Date End	Part Number	Part Name	Qty. per Model/Kit
10-30	QK10	87-42		8002K000-A	Charge relief valve kit, 10-30 bar (SB-1989-002)	1
	K50	87-42		001149 (9004201-6200)	O-ring (SB-1989-002)	1
32-42	QK10	94-13		8510269	Charge relief valve kit, 30-42 bar	1
	K50	94-13		001149 (9004201-6200)	O-ring	1

SHAFT

C3	L100	92-16		340521	Shaft, 15 tooth spline (SB-1992-008)	1
C5	L100	93-26		742775	Shaft, 19 tooth spline	1
T3	L61	92-16		716761 (9004600-1224)	Cotter pin	1
	L80	87-42	91-39	532432 (9003310-2514)	Key	1
	L90	87-42		9003575-0071	Slotted nut	1
	L100	92-16		342915	Shaft, 15, tapered (SB-1992-008)	1
T8	L90	98-48		512472	Nut	1
	L100	98-48		511778	Shaft, tapered without keyway	1
	L500	98-48		512473	Washer	1
TB	L61	04-50		716761 (9004600-1224)	Cotter pin	1
	L90	04-50		9003575-0071	Slotted nut	1
	L100	04-50		342915	Shaft, tapered	1
	L200	04-50		753848	Flange	1
TL	L90	98-48		512472	Nut	1
	L100	98-48		511778	Shaft, tapered	1
	L200	98-48		753848	Flange	1
	L500	98-48		512473	Washer	1

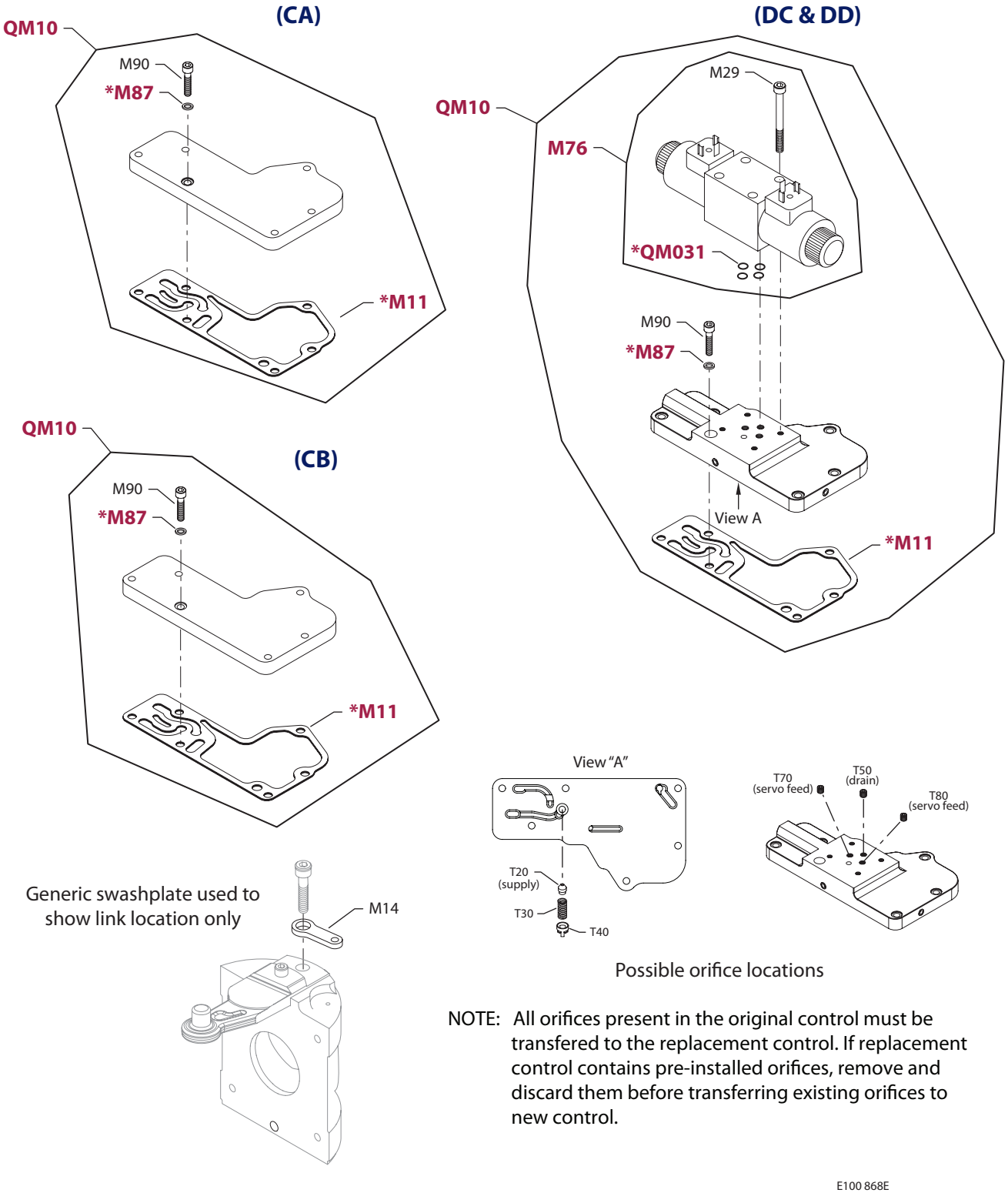

Possible orifice locations

NOTE: All orifices present in the original control must be transfered to the replacement control. If replacement control contains pre-installed orifices, remove and discard them before transferring existing orifices to new control.

E100 868E

* = included in control seal kit QM210

Enlarged **bold** type item numbers are recommended part to stock for servicing.

CONTROL

Order Code	Item	Date Begin	Date End	Part Number	Part Name	Qty. per Model/Kit
CA	M11	87-42		8800520	Control gasket	1
	M87	87-42		592386	Seal washer	1
	M90	87-42		693341 (9007314-0606)	Screw	6
	QM10	87-42		8002M0CA-A	Control cover plate kit	1
	QM210	87-42		11096319	Control seal kit	1
CB	M11	87-42		8800520	Control gasket	1
	M14	87-42		648600 (8100052)	Feedback link	1
	M87	87-42		592386	Seal washer	1
	M90	87-42		693341 (9007314-0606)	Screw	6
	QM10	87-42		8002M0CA-A	Control cover plate kit	1
	QM210	87-42		11096319	Control seal kit	1
DC	M11	87-42		8800520	Control gasket	1
	M87	87-42		592386	Seal washer	1
	M90	87-42		693341 (9007314-0606)	Screw	6
	QM10	87-42		8002M0DC-A	3-position control kit, 12 volt	1
	QM031	87-42		11099647	Valve seal kit	1
	QM210	87-42		11096161	Control seal kit	1
DD	M11	87-42		8800520	Control gasket	1
	M87	87-42		592386	Seal washer	1
	M90	87-42		693341 (9007314-0606)	Screw	6
	QM10	87-42		8510314	3-position control kit, 24 volt	1
	QM031	87-42		11099647	Valve seal kit	1
	QM210	87-42		11096161	Control seal kit	1

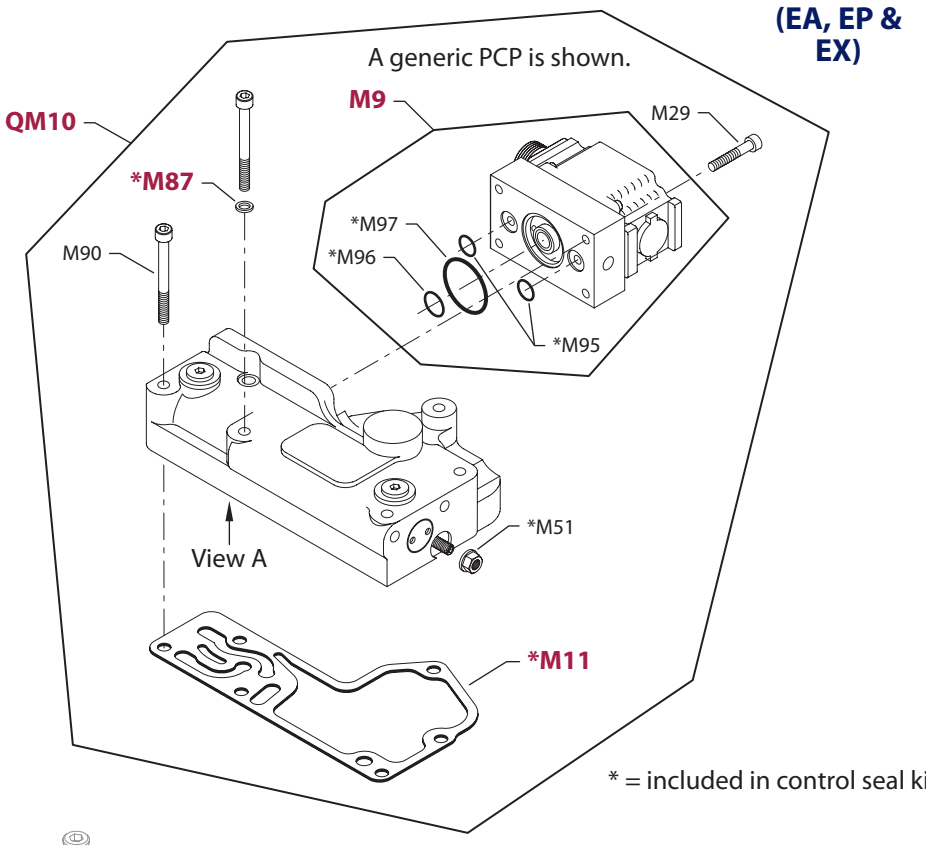

* = included in control seal kit QM210

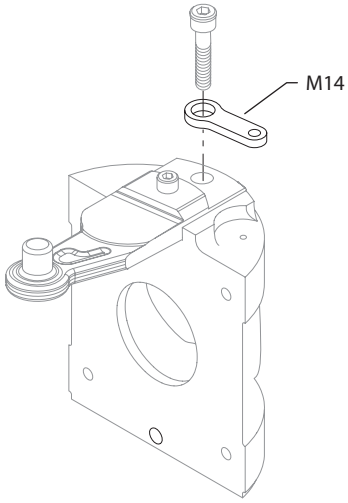

Generic swashplate used to show link location only

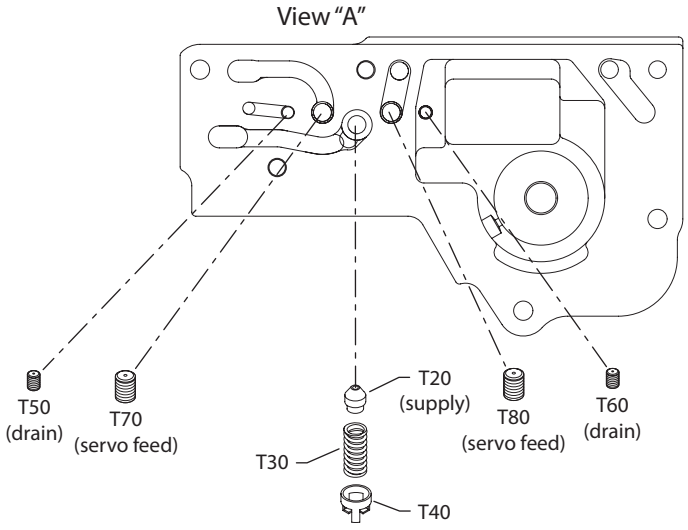

Possible orifice locations

NOTE: All orifices present in the original control must be transfered to the replacement control. If replacement control contains pre-installed orifices, remove and discard them before transferring existing orifices to new control.

E100 694E

Enlarged **bold** type item numbers are recommended part to stock for servicing.

CONTROL

Order Code	Item	Date Begin	Date End	Part Number	Part Name	Qty. per Model/Kit
EA	M9	87-42		MCV110A1017	PCP, MS connector	1
	M11	87-42		8800520	Control gasket	1
	M14	87-42		648600 (8100052)	Feedback link	1
	M29	87-42		K07067	Screw	4
	M51	87-42		9003509-0008	Seal nut	1
	M87	87-42		592386	Seal washer	1
	M90	87-42		692889 (9007314-0611)	Screw	6
	M95	87-42		318337 (9004104-0120)	O-ring	2
	M96	87-42		011304 (9004104-0140)	O-ring	1
	M97	87-42		318345 (9004104-0240)	O-ring	1
	QM10	87-42		8002M0EA-B	EDC kit, MS connector	1
	QM210	87-42		11096173	Control seal kit	1
EP	M9	87-42		MCV110A1058	PCP, Packard connector	1
	M11	87-42		8800520	Control gasket	1
	M14	87-42		648600 (8100052)	Feedback link	1
	M29	87-42		K07067	Screw	4
	M51	87-42		9003509-0008	Seal nut	1
	M87	87-42		592386	Seal washer	1
	M90	87-42		692889 (9007314-0611)	Screw	6
	M95	87-42		318337 (9004104-0120)	O-ring	2
	M96	87-42		011304 (9004104-0140)	O-ring	1
	M97	87-42		318345 (9004104-0240)	O-ring	1
	QM10	87-42		8002M0EP-B	EDC kit, Packard connector	1
	QM210	87-42		11096173	Control seal kit	1
EX	M9	87-42		MCV110A1090	PCP, Metri-pack connector	1
	M11	87-42		8800520	Control gasket	1
	M14	87-42		648600 (8100052)	Feedback link	1
	M29	87-42		K07067	Screw	4
	M51	87-42		9003509-0008	Seal nut	1
	M87	87-42		592386	Seal washer	1
	M90	87-42		692889 (9007314-0611)	Screw	6
	M95	87-42		318337 (9004104-0120)	O-ring	2
	M96	87-42		011304 (9004104-0140)	O-ring	1
	M97	87-42		318345 (9004104-0240)	O-ring	1
	QM10	87-42		8002M0EX-B	EDC kit, Metri-pack connector	1
	QM210	87-42		11096173	Control seal kit	1

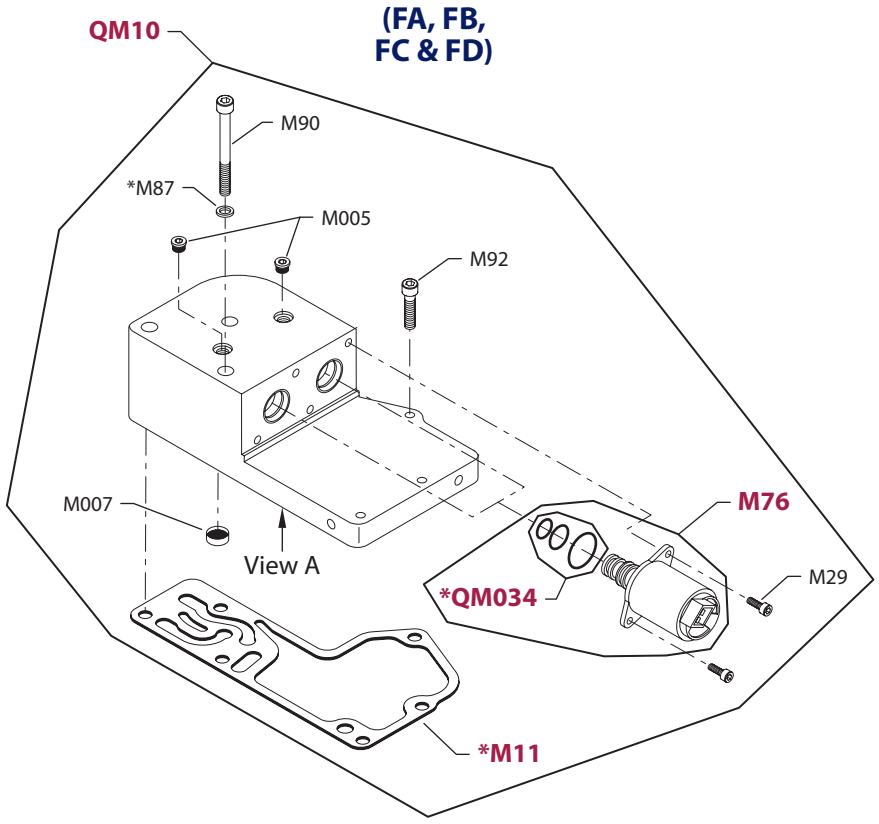

* = included in control seal kit QM210

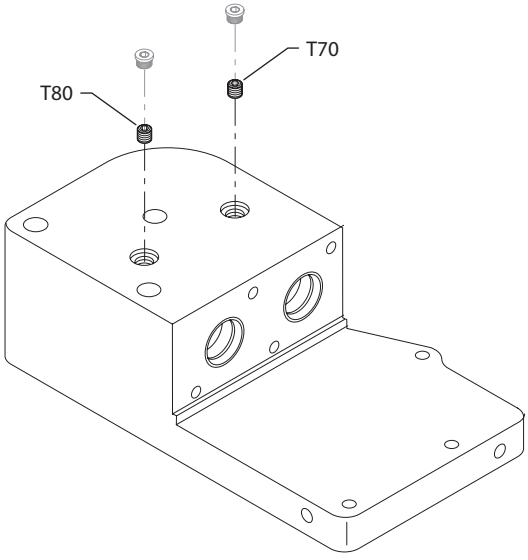

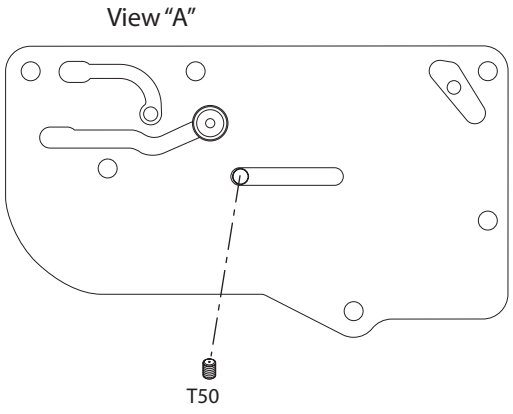

Possible orifice locations

NOTE: All orifices present in the original control must be transfered to the replacement control. If replacement control contains pre-installed orifices, remove and discard them before transferring existing orifices to new control.

E101 858E

Enlarged **bold** type item numbers are recommended part to stock for servicing.

CONTROL

Order Code	Item	Date Begin	Date End	Part Number	Part Name	Qty. per Model/Kit
FA	M11	97-30		8800520	Control gasket	1
	M29	97-30		067694	Screw	4
	M76	97-30		518080	Solenoid valve, 12v	2
	M87	97-30		592386	Seal washer	1
	M90	97-30		9007314-0614	Screw	3
	M92	97-30		041160 (9007314-0605)	Screw	3
	M005	97-30		11040532	Plug assembly	2
	M007	97-30		K00775	Filter screen	1
	QM10	97-30		11067537	NFPE control kit, 12v	1
	QM034	97-30		11099849	Solenoid valve seal kit	1
	QM210	97-30		11100027	Control seal kit	1
FB	M11	97-35		8800520	Control gasket	1
	M29	97-35		067694	Screw	4
	M76	97-35		518081	Solenoid valve, 24v	2
	M87	97-35		592386	Seal washer	1
	M90	97-35		9007314-0614	Screw	3
	M92	97-35		041160 (9007314-0605)	Screw	3
	M005	97-35		11040532	Plug assembly	2
	M007	97-35		K00775	Filter screen	1
	QM10	97-35		11067538	NFPE control kit, 24v	1
	QM034	97-35		11099849	Solenoid valve seal kit	1
	QM210	97-35		11100027	Control seal kit	1
FC	M11	97-35		8800520	Control gasket	1
	M29	97-35		067694	Screw	4
	M76	97-35		518079	Solenoid valve, 12v	2
	M87	97-35		592386	Seal washer	1
	M90	97-35		9007314-0614	Screw	3
	M92	97-35		041160 (9007314-0605)	Screw	3
	M005	97-35		11040532	Plug assembly	2
	M007	97-35		K00775	Filter screen	1
	QM10	97-35		8510220	NFPE control kit, 12v	1
	QM034	97-35		11099849	Solenoid valve seal kit	1
	QM210	97-35		11100027	Control seal kit	1
FD	M11	97-35		8800520	Control gasket	1
	M29	97-35		067694	Screw	4
	M76	97-35		517214	Solenoid valve, 24v	2
	M87	97-35		592386	Seal washer	1
	M90	97-35		9007314-0614	Screw	3
	M92	97-35		041160 (9007314-0605)	Screw	3
	M005	97-35		11040532	Plug assembly	2
	M007	97-35		K00775	Filter screen	1
	QM10	97-35		8510380	NFPE control kit, 24v	1
	QM034	97-35		11099849	Solenoid valve seal kit	1
	QM210	97-35		11100027	Control seal kit	1

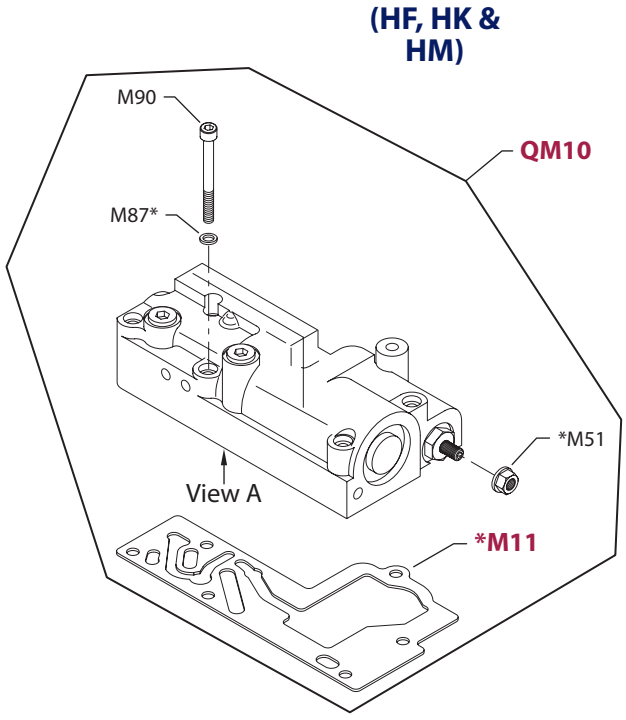

* = included in control seal kit QM210

Generic swashplate used to show link location only

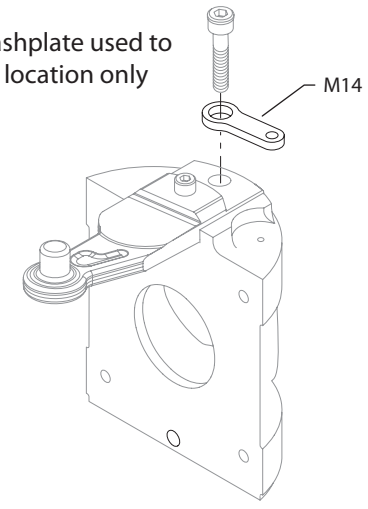

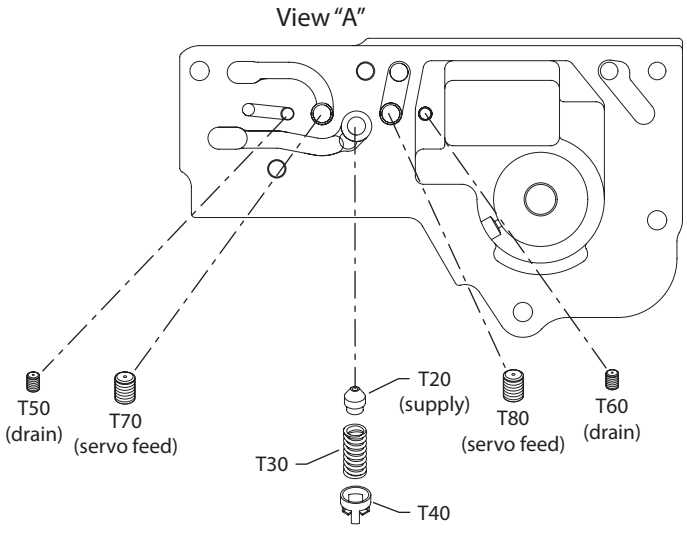

Possible orifice locations

NOTE: All orifices present in the original control must be transfered to the replacement control. If replacement control contains pre-installed orifices, remove and discard them before transferring existing orifices to new control.

E101 859E

Enlarged **bold** type item numbers are recommended part to stock for servicing.

CONTROL

Order Code	Item	Date Begin	Date End	Part Number	Part Name	Qty. per Model/Kit
HF	M11	93-47		K11419	Control gasket (SB-1993-002)	1
	M14	93-47		648600 (8100052)	Feedback link	1
	M51	93-47		9003509-0008	Seal nut	1
	M87	93-47		592386	Seal washer	1
	M90	93-47		692889 (9007314-0611)	Screw	6
	QM10	93-47		8002M0HF-A	HDC kit, 3-11 bar	1
	QM210	93-47		11096267	Control seal kit	1
HK	M11	93-47		K11419	Control gasket (SB-1993-002)	1
	M14	93-47		648600 (8100052)	Feedback link	1
	M51	93-47		9003509-0008	Seal nut	1
	M87	93-47		592386	Seal washer	1
	M90	93-47		692889 (9007314-0611)	Screw	6
	QM10	93-47		8002M0HK-A	HDC kit, 1-11 bar	1
	QM210	93-47		11096267	Control seal kit	1
HM	M11	93-47		K11419	Control gasket (SB-1993-002)	1
	M14	93-47		648600 (8100052)	Feedback link	1
	M51	93-47		9003509-0008	Seal nut	1
	M87	93-47		592386	Seal washer	1
	M90	93-47		692889 (9007314-0611)	Screw	6
	QM10	93-47		8002M0HM-A	HDC kit, 1-6.7 barr	1
	QM210	93-47		11096267	Control seal kit	1

(KA, KN & KP)

A generic PCP is shown.

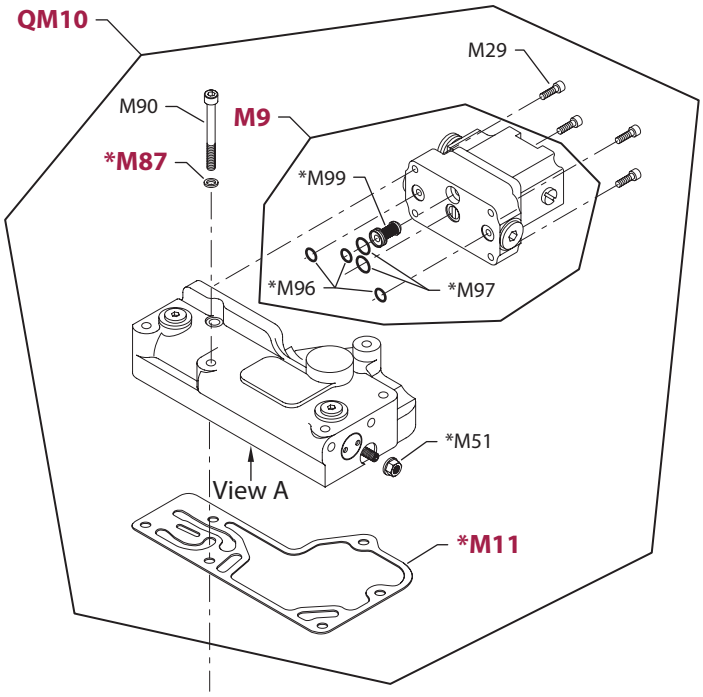

Generic swashplate used to show link location only

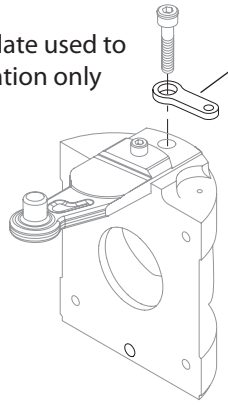

View "A"

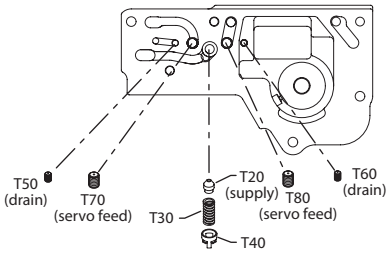

Possible orifice locations

NOTE: All orifices present in the original control must be transfered to the replacement control. If replacement control contains pre-installed orifices, remove and discard them before transferring existing orifices to new control.

E100 695E

Enlarged **bold** type item numbers are recommended part to stock for servicing.

* = included in control seal kit QM210

CONTROL

Order Code	Item	Date Begin	Date End	Part Number	Part Name	Qty. per Model/Kit
KA	M9	95-26		MCV116G4201	PCP, MS connector	1
	M11	95-26		8800520	Control gasket	1
	M14	95-26		648600 (8100052)	Feedback link	1
	M29	95-26		K07067	Screw	4
	M51	95-26		9003509-0008	Seal nut	1
	M87	95-26		592386	Seal washer	1
	M90	95-26		692889 (9007314-0611)	Screw	6
	M96	95-26		011296 (9004105-0120)	O-ring	3
	M97	95-26		9004105-0130	O-ring	1
	M99	95-26		K08572	Filter assembly	1
	QM10	95-26		8510177	EDC3 kit, MS connector, dual coil	1
	QM210	95-26		11096131	Control seal kit	1
KN	M9	95-51		MCV116A3501	PCP, MS connector	1
	M11	95-51		8800520	Control gasket	1
	M14	95-51		648600 (8100052)	Feedback link	1
	M29	95-51		K07067	Screw	4
	M51	95-51		9003509-0008	Seal nut	1
	M87	95-51		592386	Seal washer	1
	M90	95-51		692889 (9007314-0611)	Screw	6
	M96	95-51		011296 (9004105-0120)	O-ring	3
	M97	95-51		9004105-0130	O-ring	1
	M99	95-51		K08572	Filter assembly	1
	QM10	95-51		11018295	EDC3 kit, MS connector, single coil	1
	QM210	95-51		11096131	Control seal kit	1
KP	M9	95-26		MCV116G4204	PCP, Weather-pack connector	1
	M11	95-26		8800520	Control gasket	1
	M14	95-26		648600 (8100052)	Feedback link	1
	M29	95-26		K07067	Screw	4
	M51	95-26		9003509-0008	Seal nut	1
	M87	95-26		592386	Seal washer	1
	M90	95-26		692889 (9007314-0611)	Screw	6
	M96	95-26		011296 (9004105-0120)	O-ring	3
	M97	95-26		9004105-0130	O-ring	1
	M99	95-26		K08572	Filter assembly	1
	QM10	95-26		8510355	EDC3 kit, Weather-pack connector, dual coil	1
	QM210	95-26		11096131	Control seal kit	1

(MA)

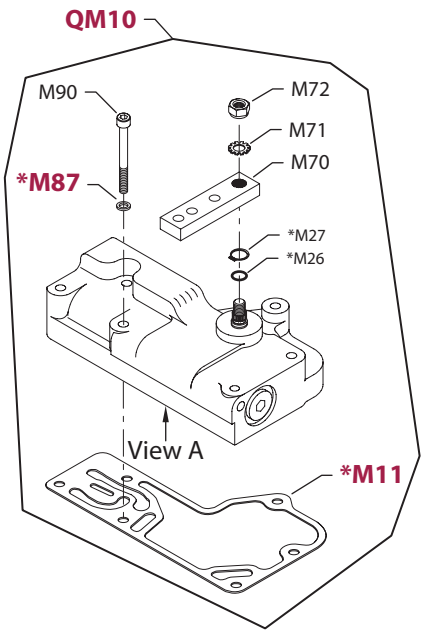

(MB)

A generic neutral start switch is shown.

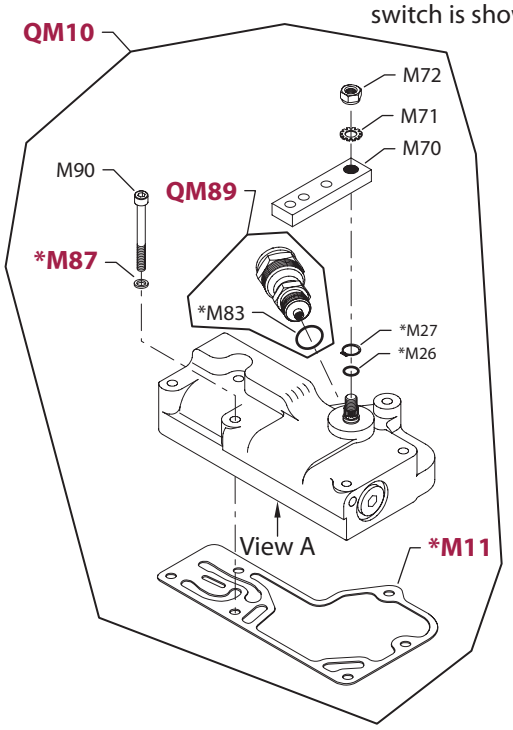

* = included in control seal kit QM210

Generic swashplate used to show link location only

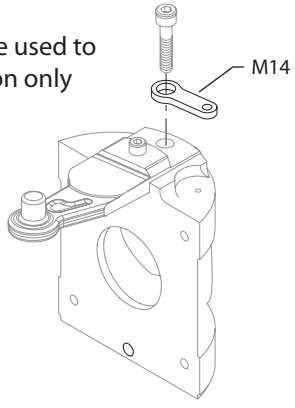

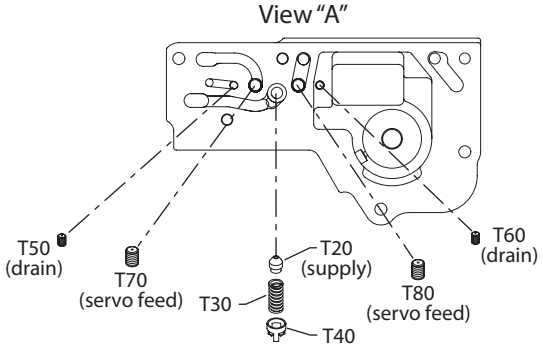

Possible orifice locations

NOTE: All orifices present in the original control must be transfered to the replacement control. If replacement control contains pre-installed orifices, remove and discard them before transferring existing orifices to new control.

E101 860E

Enlarged **bold** type item numbers are recommended part to stock for servicing.

CONTROL

Order Code	Item	Date Begin	Date End	Part Number	Part Name	Qty. per Model/Kit
MA	M11	87-42		8800520	Control gasket	1
	M14	87-42		648600 (8100052)	Feedback link	1
	M26	87-42		144725 (9004105-0110)	O-ring	1
	M27	87-42		9006300-0044	Retaining ring	1
	M70	87-42		9800916	Control handle	1
	M71	87-42		9009660-3100	Toothlock washer	1
	M72	87-42		040642 (9003513-0800)	Nut	1
	M87	87-42		592386	Seal washer	1
	M90	87-42		692889 (9007314-0611)	Screw	6
	QM10	87-42		8002M0MA-A	MDC kit	1
	QM210	87-42		11096275	Control seal kit	1
MB	M11	87-42		8800520	Control gasket	1
	M14	87-42		648600 (8100052)	Feedback link	1
	M26	87-42		144725 (9004105-0110)	O-ring	1
	M27	87-42		9006300-0044	Retaining ring	1
	M70	87-42		9800916	Control handle	1
	M71	87-42		9009660-3100	Toothlock washer	1
	M72	87-42		040642 (9003513-0800)	Nut	1
	M83	87-42		009670 (9004201-5000)	O-ring	1
	M87	87-42		592386	Seal washer	1
	M90	87-42		692889 (9007314-0611)	Screw	6
	QM10	87-42		8002M0MB-A	MDC kit	1
	QM89	87-42		80020S40	Neutral start switch kit	1
	QM210	87-42		11096275	Control seal kit	1

(MC & MD)

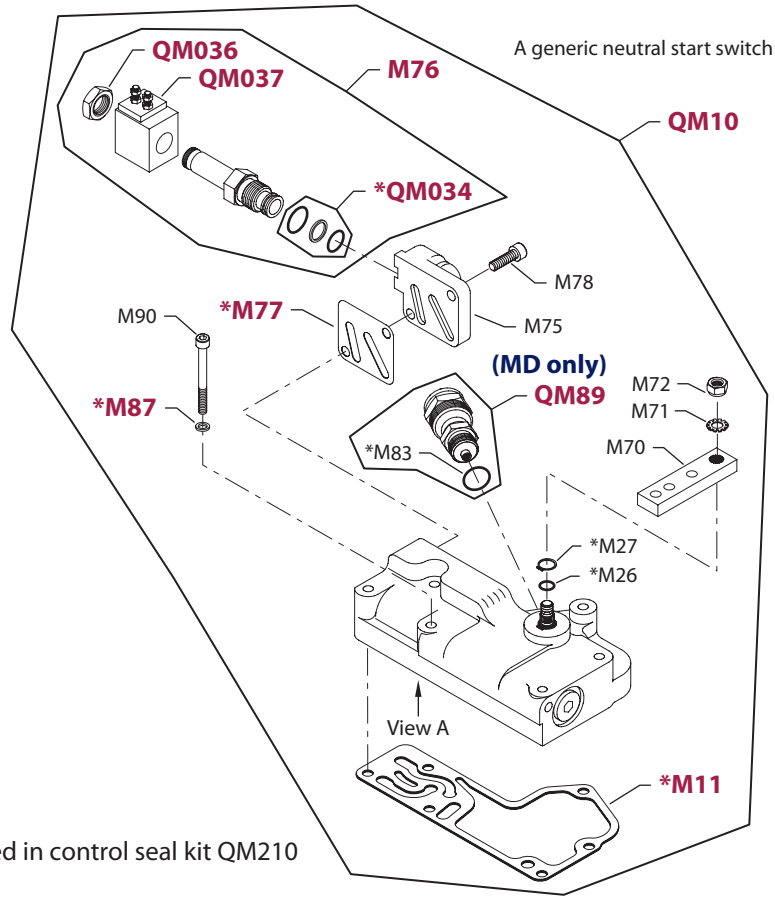

* = included in control seal kit QM210

Generic swashplate used to show link location only

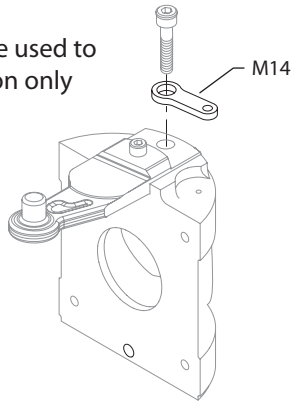

View "A"

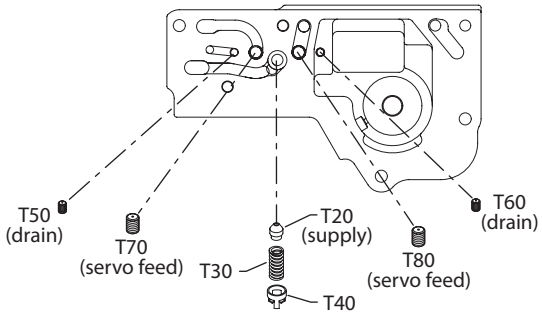

Possible orifice locations

NOTE: All orifices present in the original control must be transfered to the replacement control. If replacement control contains pre-installed orifices, remove and discard them before transferring existing orifices to new control.

E100 696E

Enlarged **bold** type item numbers are recommended part to stock for servicing.

CONTROL

Order Code	Item	Date Begin	Date End	Part Number	Part Name	Qty. per Model/Kit
MC	M11	87-42	12-06	8800520	Control gasket	1
	M14	87-42	12-06	648600 (8100052)	Feedback link	1
	M26	87-42	12-06	144725 (9004105-0110)	O-ring	1
	M27	87-42	12-06	9006300-0044	Retaining ring	1
	M70	87-42	12-06	9800916	Control handle	1
	M71	87-42	12-06	9009660-3100	Toothlock washer	1
	M72	87-42	12-06	040642 (9003513-0800)	Nut	1
	M75	87-42	12-06	505022	Control manifold (SB-1995-003)	1
	M76	87-42	12-06	9700803	Solenoid valve, 12 volt, single pole	1
	M77	87-42	12-06	8800882	Manifold gasket	1
	M78	95-10	12-06	693341 (9007314-0606)	Screw (SB-1995-003)	2
	M78	87-42	95-09	041160 (9007314-0605)	Screw	2
	M87	87-42	12-06	592386	Seal washer	1
	M90	87-42	12-06	692889 (9007314-0611)	Screw	6
	QM10	87-42	12-06	8002M0MC-A	MDC kit w/12 volt solenoid, single pole	1
	QM034	87-42	12-06	11099649	Solenoid valve seal kit	1
	QM036	87-42	12-06	11100383	Nut	1
	QM037	87-42	12-06	11100388	Coil, 12v	1
	QM210	87-42	12-06	11100049	Control seal kit	1
MD	M1	87-42	07-19	8002M0MD-A	MDC kit w/12 volt solenoid, high force nss	1
	M11	87-42	07-19	8800520	Control gasket	1
	M14	87-42	07-19	648600 (8100052)	Feedback link	1
	M26	87-42	07-19	144725 (9004105-0110)	O-ring	1
	M27	87-42	07-19	9006300-0044	Retaining ring	1
	M70	87-42	07-19	9800916	Control handle	1
	M71	87-42	07-19	9009660-3100	Toothlock washer	1
	M72	87-42	07-19	040642 (9003513-0800)	Nut	1
	M75	87-42	07-19	505022	Control manifold (SB-1995-003)	1
	M76	87-42	07-19	326108 (9700886)	Solenoid valve, 12 volt, 2 pole	1
	M77	87-42	07-19	8800882	Manifold gasket	1
	M78	95-10	07-19	693341 (9007314-0606)	Screw (SB-1995-003)	2
	M78	87-42	95-09	041160 (9007314-0605)	Screw	2
	M83	87-42	07-19	001131 (9004201-5000)	O-ring	1
	M87	87-42	07-19	592386	Seal washer	1
	M90	87-42	07-19	692889 (9007314-0611)	Screw	6
	QM10	87-42	07-19	8002M0MD-A	MDC kit w/12 volt solenoid, high force nss	1
	QM034	87-42	12-06	11099649	Solenoid valve seal kit	1
	QM036	87-42	12-06	11100383	Nut	1
	QM037	87-42	12-06	11100385	Coil, 12v	1
	QM210	87-42	12-06	11100049	Control seal kit	1
	QM89	87-42	07-19	8510027	Neutral start switch kit, high force	1

(ME)

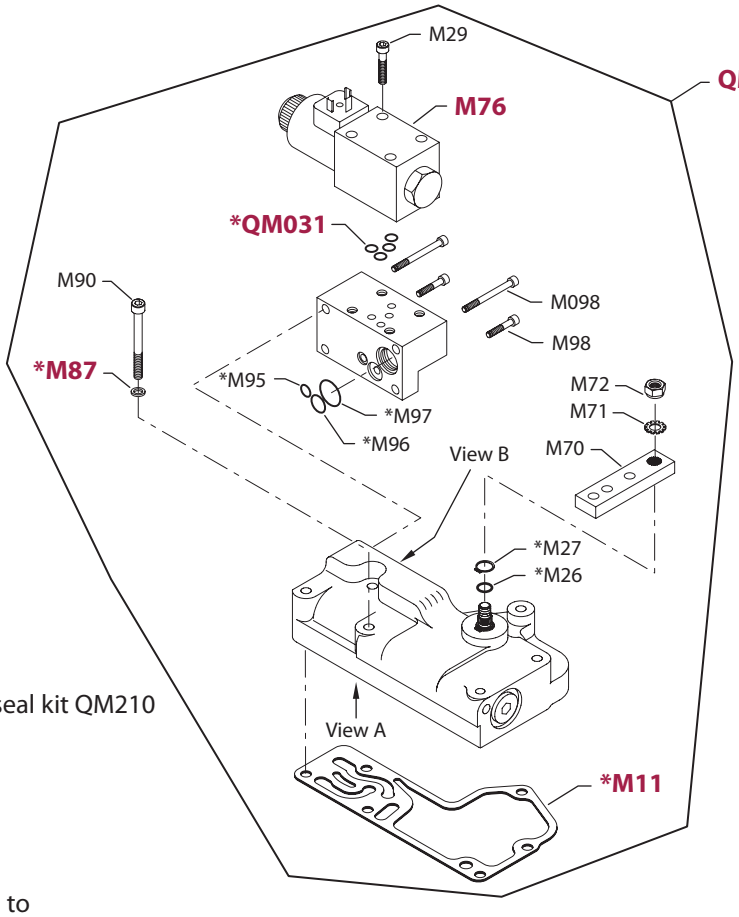

* = included in control seal kit QM210

Generic swashplate used to show link location only

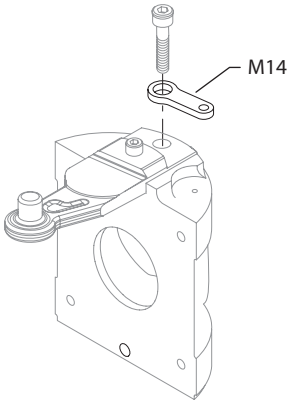

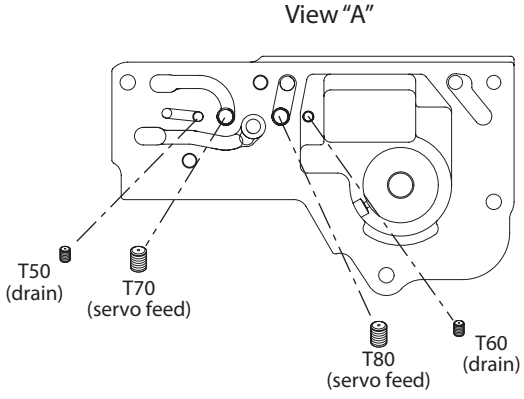

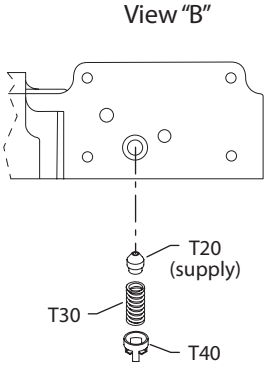

Possible orifice locations

NOTE: All orifices present in the original control must be transfered to the replacement control. If replacement control contains pre-installed orifices, remove and discard them before transferring existing orifices to new control.

E101 861E

Enlarged **bold** type item numbers are recommended part to stock for servicing.

CONTROL

Order Code	Item	Date Begin	Date End	Part Number	Part Name	Qty. per Model/Kit
ME	M11	92-12		8800520	Control gasket	1
	M14	92-12		648600 (8100052)	Feedback link	1
	M26	92-12		144725 (9004105-0110)	O-ring	1
	M27	92-12		9006300-0044	Retaining ring	1
	M29	92-12		035592	Screw	4
	M70	92-12		9800916	Control handle	1
	M71	92-12		9009660-3100	Toothlock washer	1
	M72	92-12		040642 (9003513-0800)	Nut	1
	M76	92-12		519357	Solenoid valve, 12 volt, 2 pole	1
	M87	92-12		592386	Seal washer	1
	M90	92-12		692889 (9007314-0611)	Screw	6
	M95	92-12		144725 (9004105-0110)	O-ring	1
	M96	92-12		056713 (9004105-0140)	O-ring	1
	M97	92-12		9004105-0180	O-ring	1
	M98	92-12		067686	Screw	2
	M098	92-12		035592	Screw	2
	QM10	92-12		11099385	MDC kit w/24 volt solenoid, 2 pole	1
	QM031	92-12		11099647	Seal kit	1
	QM210	92-12		11099976	Control seal kit	1

(MF & MG)

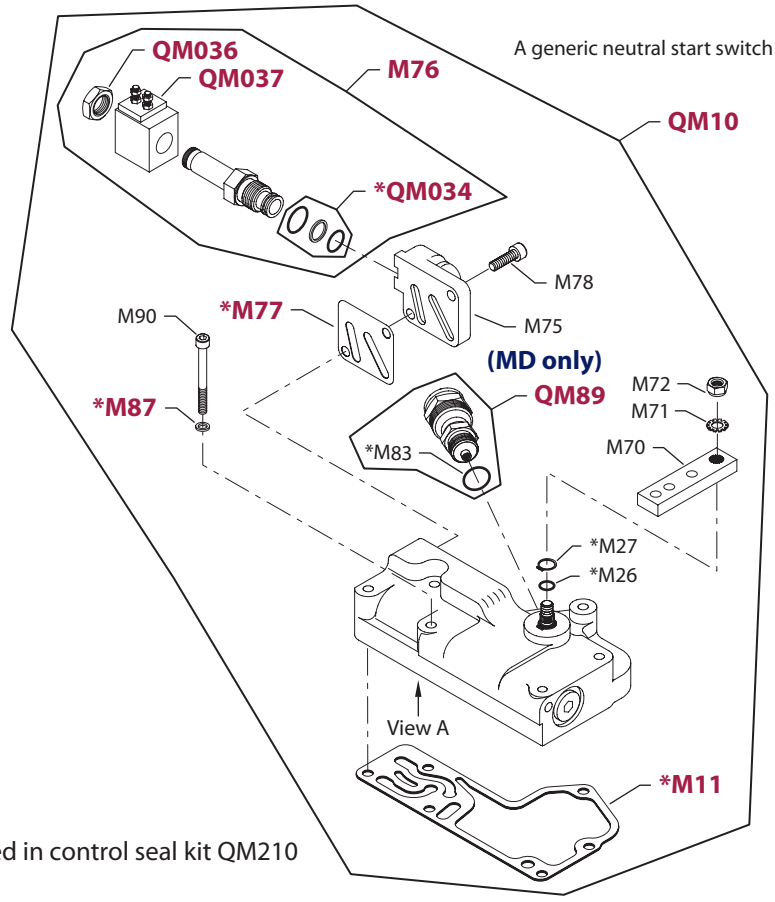

* = included in control seal kit QM210

Generic swashplate used to show link location only

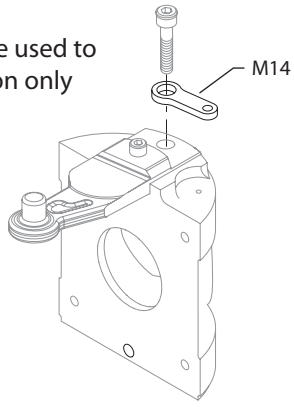

View "A"

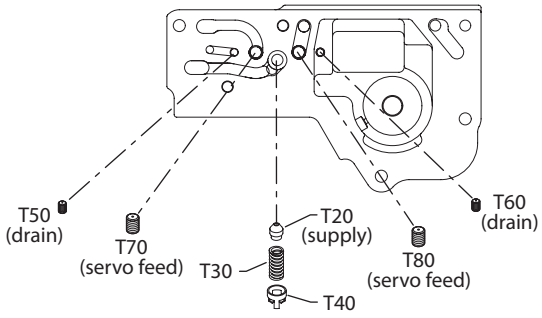

Possible orifice locations

NOTE: All orifices present in the original control must be transfered to the replacement control. If replacement control contains pre-installed orifices, remove and discard them before transferring existing orifices to new control.

E100 696E

Enlarged **bold** type item numbers are recommended part to stock for servicing.

CONTROL

Order Code	Item	Date Begin	Date End	Part Number	Part Name	Qty. per Model/Kit
MF	M11	87-42		8800520	Control gasket	1
	M14	87-42		648600 (8100052)	Feedback link	1
	M26	87-42		144725 (9004105-0110)	O-ring	1
	M27	87-42		9006300-0044	Retaining ring	1
	M70	87-42		9800916	Control handle	1
	M71	87-42		9009660-3100	Toothlock washer	1
	M72	87-42		040642 (9003513-0800)	Nut	1
	M75	87-42		505022	Control manifold (SB-1995-003)	1
	M76	87-42		711028 (8700087)	Solenoid valve, 24 volt, 2 pole	1
	M77	87-42		8800882	Manifold gasket	1
	M78	95-10		693341 (9007314-0606)	Screw (SB-1995-003)	2
	M78	87-42	95-09	041160 (9007314-0605)	Screw	2
	M87	87-42		592386	Seal washer	1
	M90	87-42		692889 (9007314-0611)	Screw	6
	QM10	87-42		8002M0MF-A	MDC kit w/24 volt solenoid, 2 pole	1
	QM034	87-42		11099649	Solenoid valve seal kit	1
	QM036	87-42		11100383	Nut	1
	QM037	87-42		11100386	Coil, 12v	1
	QM210	87-42		11100049	Control seal kit	1
MG	M11	87-42		8800520	Control gasket	1
	M14	87-42		648600 (8100052)	Feedback link	1
	M26	87-42		144725 (9004105-0110)	O-ring	1
	M27	87-42		9006300-0044	Retaining ring	1
	M70	87-42		9800916	Control handle	1
	M71	87-42		9009660-3100	Toothlock washer	1
	M72	87-42		040642 (9003513-0800)	Nut	1
	M75	87-42		505022	Control manifold (SB-1995-003)	1
	M76	87-42		711028 (8700087)	Solenoid valve, 24 volt, 2 pole	1
	M77	87-42		8800882	Manifold gasket	1
	M78	95-10		693341 (9007314-0606)	Screw (SB-1995-003)	2
	M78	87-42	95-09	041160 (9007314-0605)	Screw	2
	M83	87-42		009670	O-ring	1
	M87	87-42		592386	Seal washer	1
	M90	87-42		692889 (9007314-0611)	Screw	6
	QM10	87-42		8002M0MG-A	MDC kit w/24 volt solenoid, 2 pole	1
	QM034	87-42		11099649	Solenoid valve seal kit	1
	QM036	87-42		11100383	Nut	1
	QM037	87-42		11100386	Coil, 12v	1
	QM89	87-42		80020S40	Neutral start switch kit	1
	QM210	87-42		11100049	Control seal kit	1

(ML & MS)

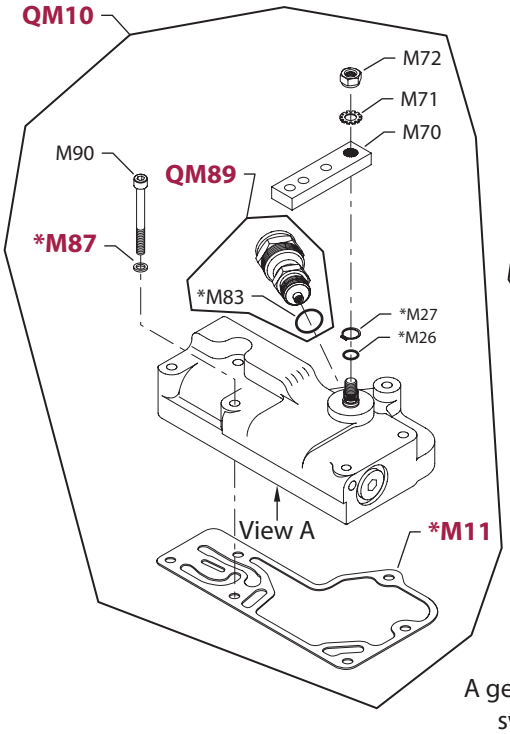

(MR)

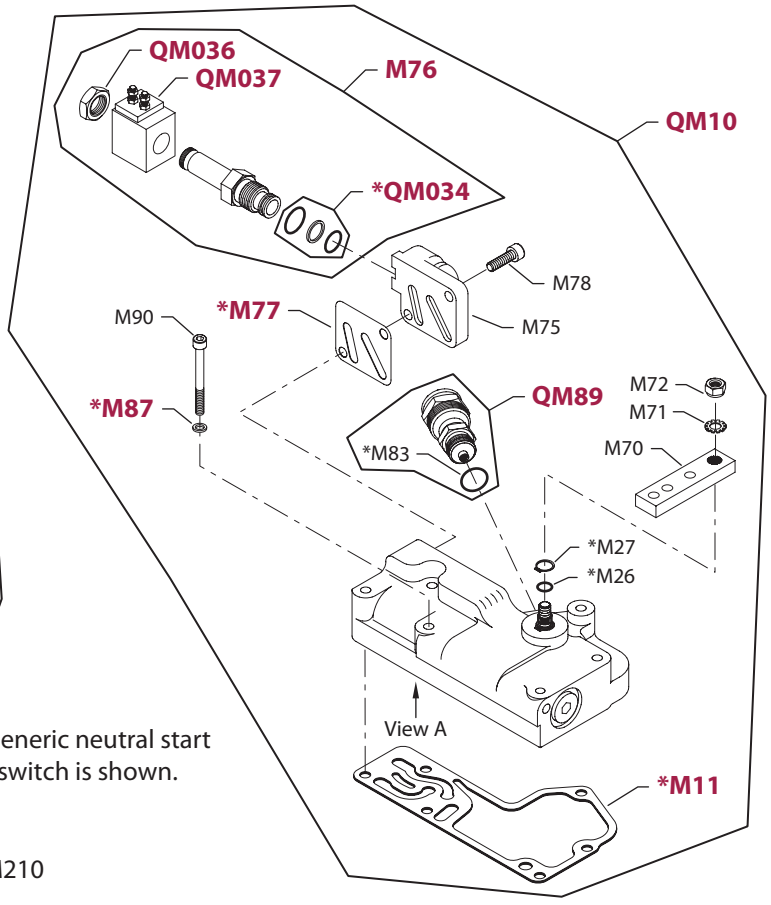

A generic neutral start switch is shown.

* = included in control seal kit QM210

Generic swashplate used to show link location only

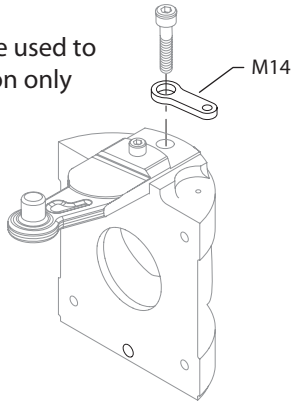

View "A"

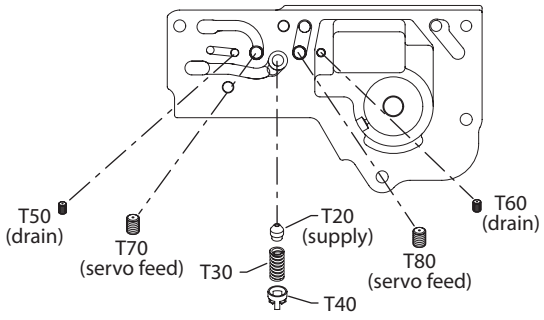

Possible orifice locations

NOTE: All orifices present in the original control must be transfered to the replacement control. If replacement control contains pre-installed orifices, remove and discard them before transferring existing orifices to new control.

E101 862E

Enlarged **bold** type item numbers are recommended part to stock for servicing.

CONTROL

Order Code	Item	Date Begin	Date End	Part Number	Part Name	Qty. per Model/Kit
ML	M11	87-42		8800520	Control gasket	1
	M14	87-42		648600 (8100052)	Feedback link	1
	M26	87-42		144725 (9004105-0110)	O-ring	1
	M27	87-42		9006300-0044	Retaining ring	1
	M70	87-42		9800916	Control handle	1
	M71	87-42		9009660-3100	Toothlock washer	1
	M72	87-42		040642 (9003513-0800)	Nut	1
	M83	87-42		009670	O-ring	1
	M87	87-42		592386	Seal washer	1
	M90	87-42		692889 (9007314-0611)	Screw	6
	QM10	87-42		8510356	MDC kit w/wide deadband, high force nss	1
	QM89	87-42		8510027	Neutral start switch kit	1
	QM210	87-42		11096275	Control seal kit	1
MR	M11	87-42		8800520	Control gasket	1
	M14	87-42		648600 (8100052)	Feedback link	1
	M26	87-42		144725 (9004105-0110)	O-ring	1
	M27	87-42		9006300-0044	Retaining ring	1
	M70	87-42		9800916	Control handle	1
	M71	87-42		9009660-3100	Toothlock washer	1
	M72	87-42		040642 (9003513-0800)	Nut	1
	M75	87-42		505022	Control manifold (SB-1995-003)	1
	M76	87-42		711028 (8700087)	Solenoid valve, 24 volt, 2 pole	1
	M77	87-42		8800882	Manifold gasket	1
	M78	95-10		693341 (9007314-0606)	Screw (SB-1995-003)	2
	M78	87-42	95-09	041160 (9007314-0605)	Screw	2
	M83	87-42		001131 (9004201-5000)	O-ring	1
	M87	87-42		592386	Seal washer	1
	M90	87-42		692889 (9007314-0611)	Screw	6
	QM10	87-42		8002M0MR-A	MDC kit w/24 volt solenoid, 2 pole, high force nss	1
	QM034	87-42		11099649	Solenoid valve seal kit	1
	QM036	87-42		11100383	Nut	1
	QM037	87-42		11100386	Coil, 12v	1
	QM89	87-42		8510027	Neutral start switch kit, high force	1
	QM210	87-42		11100049	Control seal kit	1
MS	M11	87-42		8800520	Control gasket	1
	M14	87-42		648600 (8100052)	Feedback link	1
	M26	87-42		144725 (9004105-0110)	O-ring	1
	M27	87-42		9006300-0044	Retaining ring	1
	M70	87-42		9800916	Control handle	1
	M71	87-42		9009660-3100	Toothlock washer	1
	M72	87-42		040642 (9003513-0800)	Nut	1
	M83	87-42		009670	O-ring	1
	M87	87-42		592386	Seal washer	1
	M90	87-42		692889 (9007314-0611)	Screw	6
	QM10	87-42		8510127	MDC kit w/wide deadband, high force nss	1
	QM89	87-42		8510027	Neutral start switch kit	1
	QM210	87-42		11096275	Control seal kit	1

(NA)

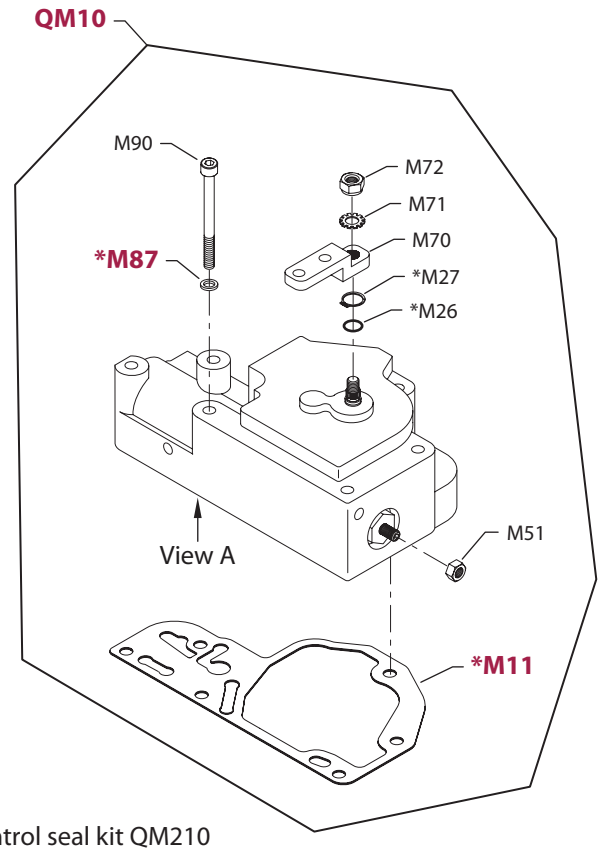

* = included in control seal kit QM210

Generic swashplate used to show link location only

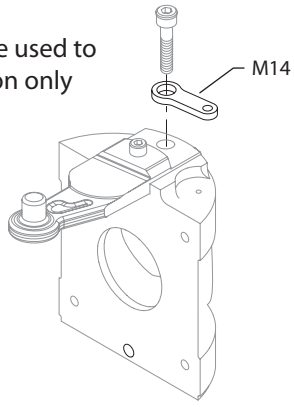

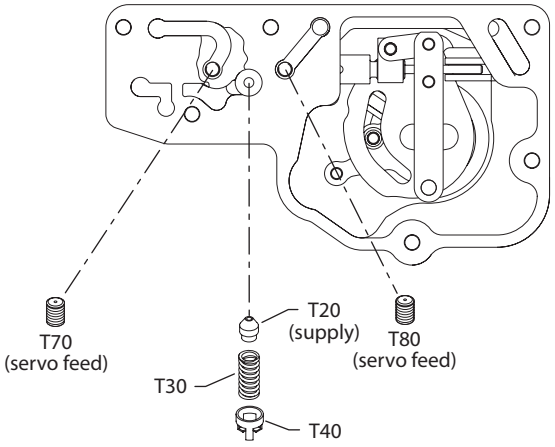

Possible orifice locations

NOTE: All orifices present in the original control must be transfered to the replacement control. If replacement control contains pre-installed orifices, remove and discard them before transferring existing orifices to new control.

E101 863E

Enlarged **bold** type item numbers are recommended part to stock for servicing.

CONTROL

Order Code	Item	Date Begin	Date End	Part Number	Part Name	Qty. per Model/Kit
NA	M11	95-45		502386	Control gasket	1
	M14	95-45		648600 (8100052)	Feedback link	1
	M26	95-45		144725 (9004105-0110)	O-ring	1
	M27	95-45		9006300-0044	Retaining ring	1
	M51	95-45		345462	Nut	1
	M70	95-45		769075	Control handle	1
	M71	95-45		9009660-3100	Toothlock washer	1
	M72	95-45		040642 (9003513-0800)	Nut	1
	M87	95-45		592386	Seal washer	1
	M90	95-45		9007314-0614	Screw	6
	QM10	95-45		11098770	MDC kit	1
	QM210	95-45		11096272	Control seal kit	1

(PA & PB)

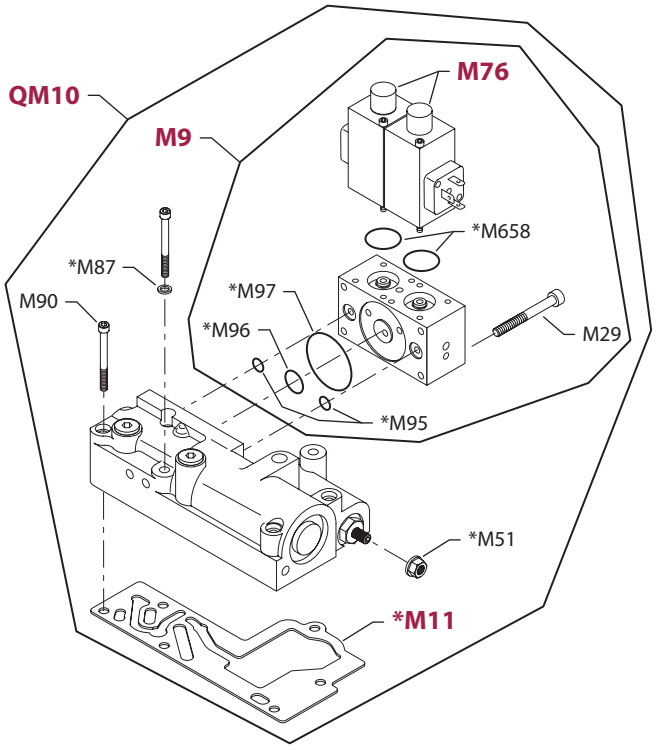

* = included in control seal kit QM210

Generic swashplate used to show link location only

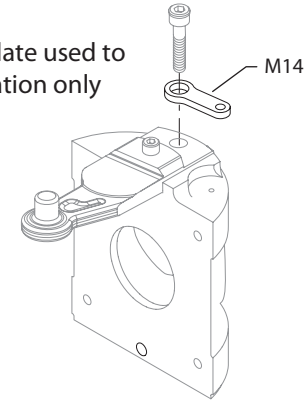

View "A"

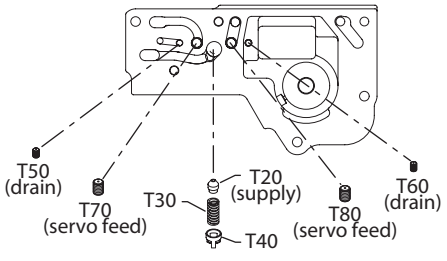

Possible orifice locations

NOTE: All orifices present in the original control must be transfered to the replacement control. If replacement control contains pre-installed orifices, remove and discard them before transferring existing orifices to new control.

E101 864E

Enlarged **bold** type item numbers are recommended part to stock for servicing.

CONTROL

Order Code	Item	Date Begin	Date End	Part Number	Part Name	Qty. per Model/Kit
PA	M9	99-20		782037	PDC, 12v	1
	M11	99-20		K11419	Control gasket	1
	M14	99-20		648600 (8100052)	Feedback link	1
	M29	99-20		035592	Screw	4
	M51	99-20		9003509-0008	Seal nut	1
	M76	99-20		11001795	Solenoid valve, 12v	1
	M87	99-20		592386	Seal washer	1
	M90	99-20		500812	Screw	6
	M95	99-20		011296 (9004105-0120)	O-ring	2
	M96	99-20		688721 (9004104-0170)	O-ring	1
	M97	99-20		314534 (9004104-0310)	O-ring	1
	M658	99-20		635938 (9004100-0210)	O-ring	2
	QM10	99-20		8510165	HDC kit w/PDC, 12v	1
	QM210	99-20		11096250	Control seal kit	1
PB	M9	94-15		782045	PDC, 24v	1
	M11	94-15		K11419	Control gasket	1
	M14	94-15		648600 (8100052)	Feedback link	1
	M29	94-15		035592	Screw	4
	M51	94-15		9003509-0008	Seal nut	1
	M76	94-15		11001794	Solenoid valve, 24v	1
	M87	94-15		592386	Seal washer	1
	M90	94-15		500812	Screw	6
	M95	94-15		011296 (9004105-0120)	O-ring	2
	M96	94-15		688721 (9004104-0170)	O-ring	1
	M97	94-15		314534 (9004104-0310)	O-ring	1
	M658	94-15		635938 (9004100-0210)	O-ring	2
	QM10	94-15		11034081	HDC kit w/PDC, 24v	1
	QM210	94-15		11096250	Control seal kit	1

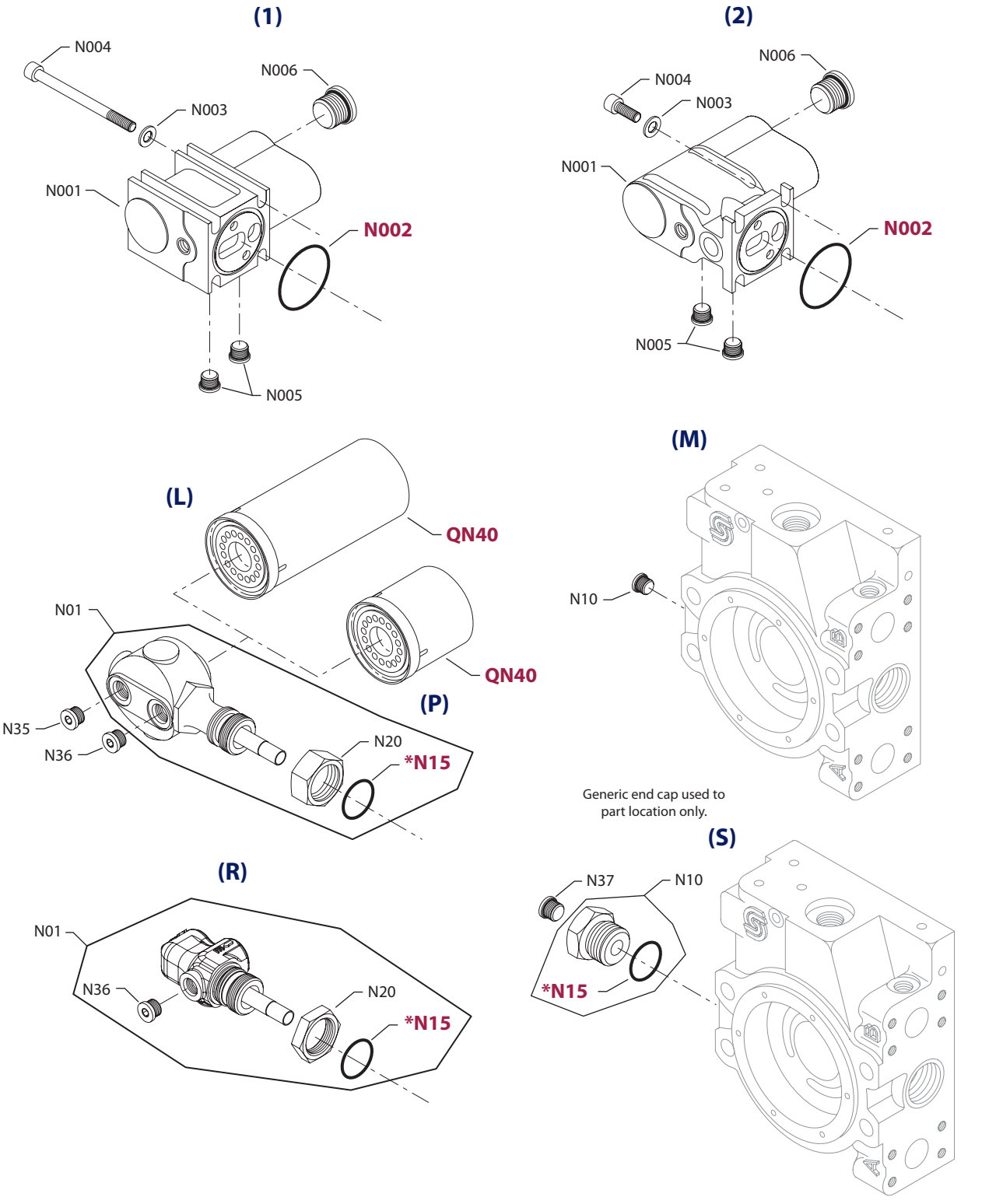

* = included in control seal kit Q210

Enlarged **bold** type item numbers are recommended part to stock for servicing.

FILTRATION

Order Code	Item	Date Begin	Date End	Part Number	Part Name	Qty. per Model/Kit
1	N001	94-43		504096	Filter manifold	1
	N002	94-43		9004104-0320	O-ring	1
	N003	94-43		002311 (9009610-3459)	Washer	4
	N004	94-43		505442	Screw	4
	N005	94-43		140644	Plug assembly	2
	N006	94-43		320002 (9005110-9200)	Plug assembly	1
2	N001	94-43		505414	Filter manifold	1
	N002	94-43		9004104-0320	O-ring	1
	N003	94-43		002311 (9009610-3459)	Washer	4
	N004	94-43		713594	Screw	4
	N005	94-43		140644	Plug assembly	2
	N006	94-43		320002 (9005110-9200)	Plug assembly	1
D				None		
L	N01	87-42		11060343	Filter manifold assembly	1
	N15	87-42		001156 (9004201-7500)	O-ring	1
	N20	87-42		11049921	Nut	1
	N35	87-42		140644	Plug assembly	1
	N36	87-42		140644	Plug assembly	1
	QN40	87-42		11004919	Filter, long	1
M	N10	87-42		140644	Plug assembly	1
P	N01	87-42		11060343	Filter manifold assembly	1
	N15	87-42		001156 (9004201-7500)	O-ring	1
	N20	87-42		11049921	Nut	1
	N35	87-42		140644	Plug assembly	1
	N36	87-42		140644	Plug assembly	1
	QN40	87-42		11004917	Filter, short	1
R	N01	87-42		11060426	Filter manifold assembly, remote	1
	N15	87-42		001156 (9004201-7500)	O-ring	1
	N20	87-42		11049921	Nut	1
	N36	87-42		140644	Plug assembly	1
S	N10	87-42		671990 (9002842-1206)	Reducer assembly	1
	N15	87-42		001156 (9004201-7500)	O-ring	1
	N37	87-42		140644	Plug assembly	1

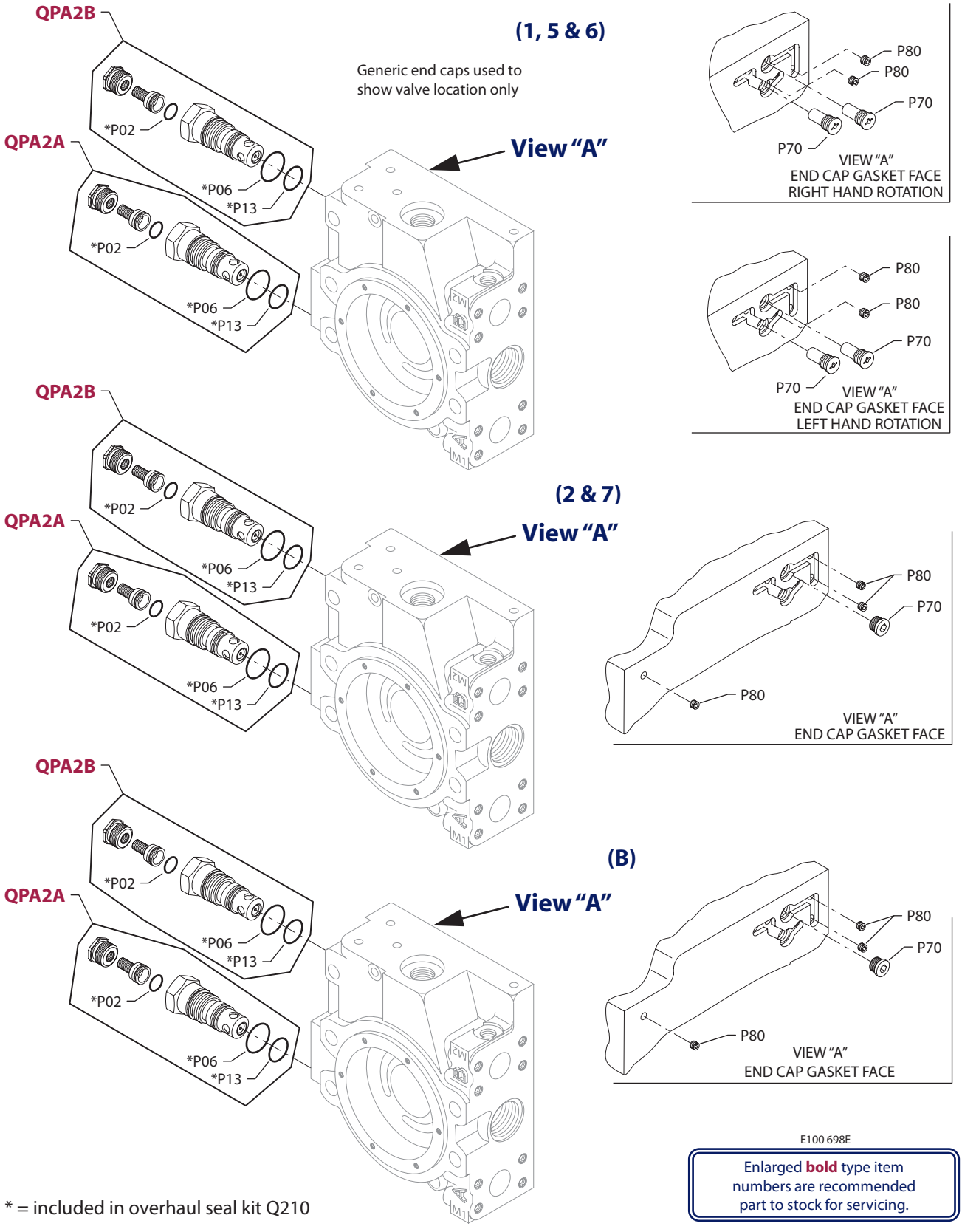

* = included in overhaul seal kit Q210

E100 698E

Enlarged **bold** type item numbers are recommended part to stock for servicing.

HIGH PRESSURE REGULATION

Order Code	Item	Date Begin	Date End	Part Number	Part Name	Qty. per Model/Kit
1	P02	87-42		141564 (9004100-0170)	O-ring	2
	P06	87-42		000836 (9004100-0200)	O-ring	2
	P13	87-42		544742 (9004105-0190)	O-ring	2
	P70	87-42		8800188	Check valve assembly	2
	P80	87-42		9005475-0004	Special pipe plug	2
	QPA2A	87-42		8510022-1	Multi-function valve kit	1
	QPA2B	87-42		8510022-1	Multi-function valve kit	1
2	P02	87-42		141564 (9004100-0170)	O-ring	2
	P06	87-42		000836 (9004100-0200)	O-ring	2
	P13	87-42		544742 (9004105-0190)	O-ring	2
	P70	87-42		327007 (9005110-4400)	Plug assembly	1
	P80	87-42		9005475-0004	Special pipe plug	3
	QPA2A	87-42		8510022-2	Multi-function valve kit	1
	QPA2B	87-42		8510022-2	Multi-function valve kit	1
5	P02	87-42		141564 (9004100-0170)	O-ring	2
	P06	87-42		000836 (9004100-0200)	O-ring	2
	P13	87-42		544742 (9004105-0190)	O-ring	2
	P70	87-42		8800188	Check valve assembly	2
	P80	87-42		9005475-0004	Special pipe plug	2
	QPA2A	87-42		8510240	Multi-function valve kit	1
	QPA2B	87-42		8510240	Multi-function valve kit	1
6	P02	87-42		141564 (9004100-0170)	O-ring	2
	P06	87-42		000836 (9004100-0200)	O-ring	2
	P13	87-42		544742 (9004105-0190)	O-ring	2
	P70	87-42		8800188	Check valve assembly	2
	P80	87-42		9005475-0004	Special pipe plug	2
	QPA2A	87-42		8510022-6	Multi-function valve kit	1
	QPA2B	87-42		8510022-6	Multi-function valve kit	1
7	P02	87-42		141564 (9004100-0170)	O-ring	2
	P16	87-42		000836 (9004100-0200)	O-ring	2
	P13	87-42		544742 (9004105-0190)	O-ring	2
	P70	87-42		327007 (9005110-4400)	Plug assembly	1
	P80	87-42		9005475-0004	Special pipe plug	3
	QPA2A	87-42		8510022-7	Multi-function valve kit	1
	QPA2B	87-42		8510022-7	Multi-function valve kit	1
B	P02	87-42		141564 (9004100-0170)	O-ring	2
	P06	87-42		000836 (9004100-0200)	O-ring	2
	P13	87-42		544742 (9004105-0190)	O-ring	2
	P70	87-42		8800188	Check valve assembly	1
	P80	87-42		9005475-0004	Special pipe plug	3
	QPA2A	87-42		8510022-1	Multi-function valve kit	1
	QPA2B	87-42		8510022-1	Multi-function valve kit	1

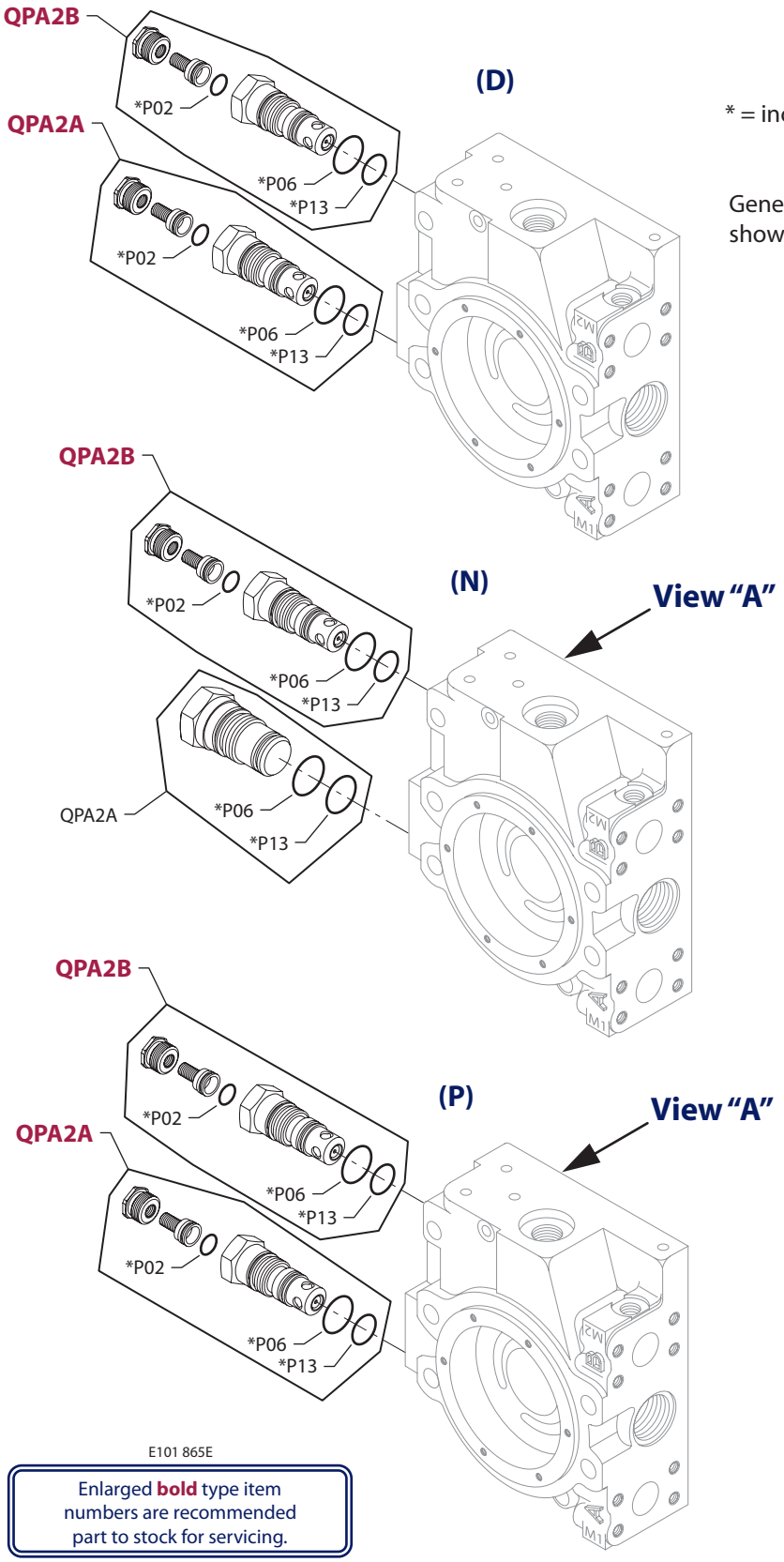

* = included in control seal kit Q210

Generic end caps used to show valve location only

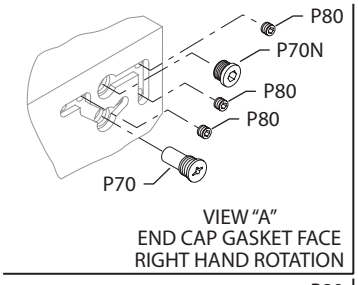

VIEW "A"
END CAP GASKET FACE
RIGHT HAND ROTATION

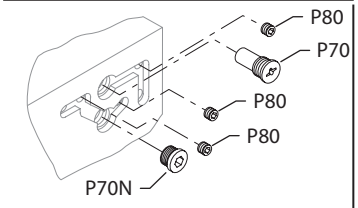

VIEW "A"
END CAP GASKET FACE
LEFT HAND ROTATION

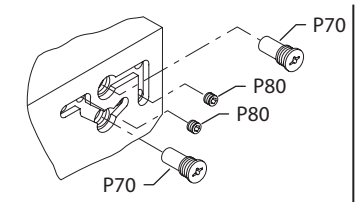

VIEW "A"
END CAP GASKET FACE
RIGHT HAND ROTATION

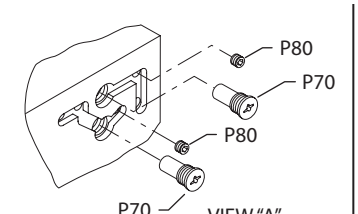

VIEW "A"
END CAP GASKET FACE
LEFT HAND ROTATION

Enlarged **bold** type item numbers are recommended part to stock for servicing.

HIGH PRESSURE REGULATION

Order Code	Item	Date Begin	Date End	Part Number	Part Name	Qty. per Model/Kit
D	P02	87-42		141564 (9004100-0170)	O-ring	2
	P06	87-42		000836 (9004100-0200)	O-ring	2
	P13	87-42		544742 (9004105-0190)	O-ring	2
	QPA2A	87-42		8510388	Multi-function valve kit	1
	QPA2B	87-42		8510388	Multi-function valve kit	1
N	P02	87-42		141564 (9004100-0170)	O-ring	2
	P06	87-42		000836 (9004100-0200)	O-ring	2
	P13	87-42		544742 (9004105-0190)	O-ring	2
	P70	87-42		8800188	Check valve assembly	1
	P70N	87-42		327007 (9005110-4400)	Plug assembly	1
	P80	87-42		9005475-0004	Special pipe plug	3
	PA2A	87-42		781971	Plug assembly	1
	QPA2B	87-42		8510022-1	Multi-function valve kit	1
P	P02	87-42		141564 (9004100-0170)	O-ring	2
	P06	87-42		000836 (9004100-0200)	O-ring	2
	P13	87-42		544742 (9004105-0190)	O-ring	2
	P70	87-42		8800188	Check valve assembly	2
	P80	87-42		9005475-0004	Special pipe plug	2
	QPA2A	87-42		8510389	Multi-function valve kit	1
	QPA2B	87-42		8510389	Multi-function valve kit	1

(01, 02, 03, 04, 05, 06, 09 & 22)

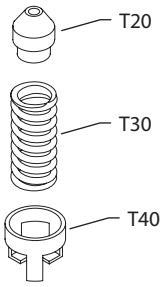

See control drawing
for orifice location

(21)

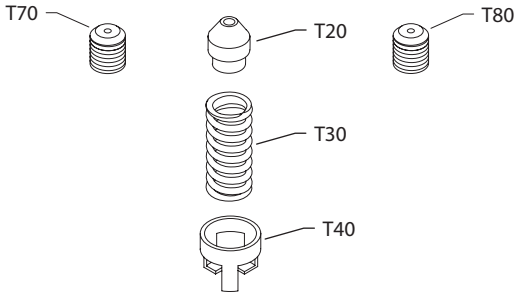

See control drawing
for orifice location

(23)

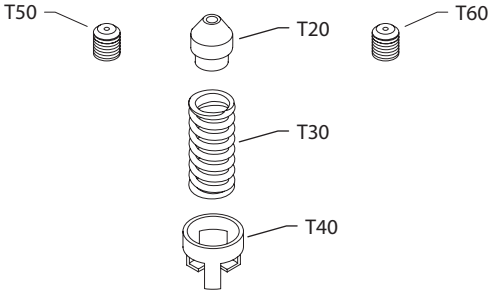

See control drawing
for orifice location

E100 103E

ORIFICE

Order Code	Item	Date Begin	Date End	Part Number	Part Name	Qty. per Model/Kit
00				None		
01	T20	87-42		8801136	Orificed check valve, .018″	1
	T30	87-42		679506 (8700007)	Spring	1
	T40	87-42		8801303	Spring retainer	1
02	T20	87-42		8801139	Orificed check valve, .026″	1
	T30	87-42		679506 (8700007)	Spring	1
	T40	87-42		8801303	Spring retainer	1
03	T20	87-42		11061958	Orificed check valve, .81mm	1
	T30	87-42		679506 (8700007)	Spring	1
	T40	87-42		8801303	Spring retainer	1
04	T20	87-42		11061970	Orificed check valve, 1.02mm	1
	T30	87-42		679506 (8700007)	Spring	1
	T40	87-42		8801303	Spring retainer	1
05	T20	87-42		11061981	Orificed check valve, 1.37mm	1
	T30	87-42		679506 (8700007)	Spring	1
	T40	87-42		8801303	Spring retainer	1
06	T20	87-42		11061993	Orificed check valve, 1.57mm	1
	T30	87-42		679506 (8700007)	Spring	1
	T40	87-42		8801303	Spring retainer	1
09	T20	87-42		11062006	Orificed check valve, 2.34mm	1
	T30	87-42		679506 (8700007)	Spring	1
	T40	87-42		8801303	Spring retainer	1
21	T20	87-42		11061970	Orificed check valve, 1.02mm	1
	T30	87-42		679506 (8700007)	Spring	1
	T40	87-42		8801303	Spring retainer	1
	T70	87-42		714477	Orifice plug, 0.8mm, M8 x 8	1
	T80	87-42		714477	Orifice plug, 0.8mm, M8 x 8	1
22	T20	87-42		8801137	Orificed check valve, .022″	1
	T30	87-42		679506 (8700007)	Spring	1
	T40	87-42		8801303	Spring retainer	1
23	T20	87-42		11061958	Orificed check valve, .81mm	1
	T30	87-42		679506 (8700007)	Spring	1
	T40	87-42		8801303	Spring retainer	1
	T50	87-42		639153	Orifice plug, 1.3mm, M5 x 6	1
	T60	87-42		639153	Orifice plug, 1.3mm, M5 x 6	1

(25, 28 & 30)

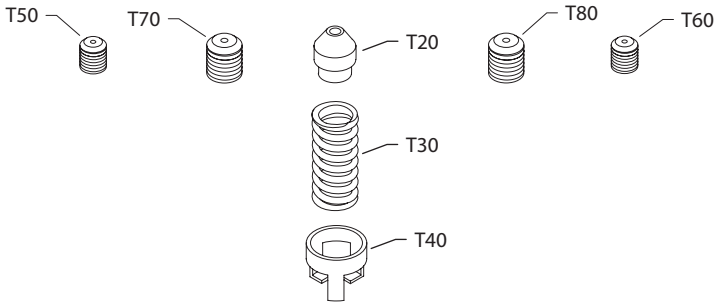

See control drawing
for orifice location

(26 & 29)

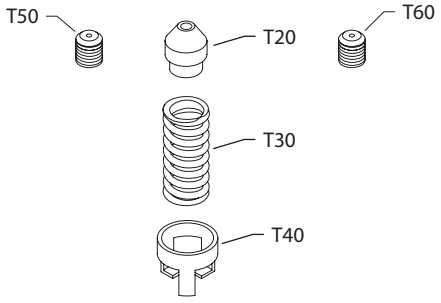

See control drawing
for orifice location

(32 & 33)



See control drawing
for orifice location

E100 933E

ORIFICE

Order Code	Item	Date Begin	Date End	Part Number	Part Name	Qty. per Model/Kit
25	T20	87-42		8801139	Orificed check valve, .026″	1
	T30	87-42		679506 (8700007)	Spring	1
	T40	87-42		8801303	Spring retainer	1
	T50	87-42		606657	Orifice plug, 0.5mm, M5 x 6	1
	T60	87-42		606657	Orifice plug, 0.5mm, M5 x 6	1
	T70	87-42		716837	Orifice plug, 0.6mm, M8 x 8	1
	T80	87-42		716837	Orifice plug, 0.6mm, M8 x 8	1
26	T20	87-42		11061958	Orificed check valve, .81mm	1
	T30	87-42		679506 (8700007)	Spring	1
	T40	87-42		8801303	Spring retainer	1
	T50	87-42		598292	Orifice plug, 0.8mm, M5 x 6	1
	T60	87-42		598292	Orifice plug, 0.8mm, M5 x 6	1
28	T20	87-42		8801139	Orificed check valve, .026″	1
	T30	87-42		679506 (8700007)	Spring	1
	T40	87-42		8801303	Spring retainer	1
	T50	87-42		639104	Orifice plug, 0.7mm, M5 x 6	1
	T60	87-42		639104	Orifice plug, 0.7mm, M5 x 6	1
	T70	87-42		704650	Orifice plug, 0.7mm, M8 x 8	1
	T80	87-42		704650	Orifice plug, 0.7mm, M8 x 8	1
29	T20	87-42		11061958	Orificed check valve, .81mm	1
	T30	87-42		679506 (8700007)	Spring	1
	T40	87-42		8801303	Spring retainer	1
	T50	87-42		639104	Orifice plug, 0.7mm, M5 x 6	1
	T60	87-42		639104	Orifice plug, 0.7mm, M5 x 6	1
30	T20	87-42		8801139	Orificed check valve, .026″	1
	T30	87-42		679506 (8700007)	Spring	1
	T40	87-42		8801303	Spring retainer	1
	T50	87-42		639153	Orifice plug, 1.3mm, M5 x 6	1
	T60	87-42		639153	Orifice plug, 1.3mm, M5 x 6	1
	T70	87-42		704650	Orifice plug, 0.7mm, M8 x 8	1
	T80	87-42		704650	Orifice plug, 0.7mm, M8 x 8	1
32	T50	87-42		639120	Orifice plug, 1.0mm, M5 x 6	1
	T60	87-42		639153	Orifice plug, 1.3mm, M5 x 6	1
33	T50	87-42		639153	Orifice plug, 1.3mm, M5 x 6	1
	T60	87-42		639153	Orifice plug, 1.3mm, M5 x 6	1

(34)



See control drawing
for orifice location

(35)

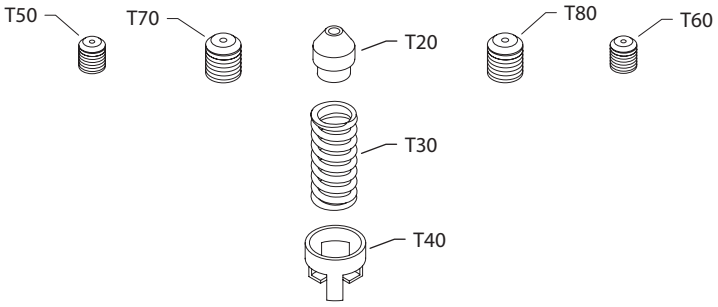

See control drawing
for orifice location

(37, 45, 46 & 49)

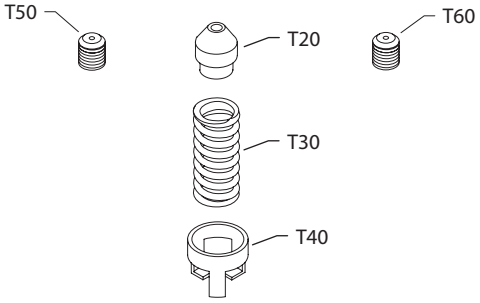

See control drawing
for orifice location

(50)

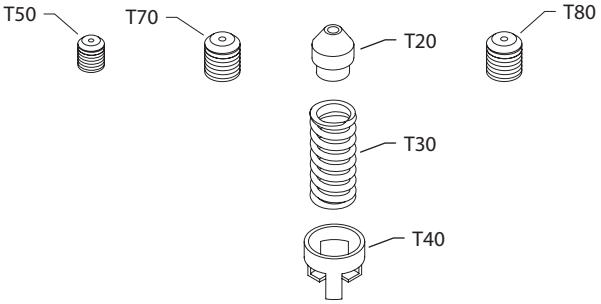

See control drawing
for orifice location

(59)

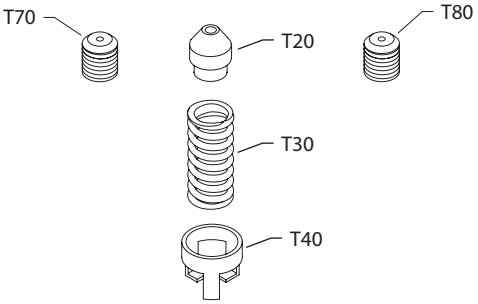

See control drawing
for orifice location

E100 699E

Enlarged **bold** type item numbers are recommended part to stock for servicing.

ORIFICE

Order Code	Item	Date Begin	Date End	Part Number	Part Name	Qty. per Model/Kit
34	T70	87-42		755793	Orifice plug, 1.0mm, M8 x 8	1
	T80	87-42		755793	Orifice plug, 1.0mm, M8 x 8	1
35	T20	87-42		11061958	Orificed check valve, 0.81mm	1
	T30	87-42		679506 (8700007)	Spring	1
	T40	87-42		8801303	Spring retainer	1
	T50	87-42		598292	Orifice plug, 0.8mm, M5 x 6	1
	T60	87-42		598292	Orifice plug, 0.8mm, M5 x 6	1
	T70	87-42		714477	Orifice plug, 0.8mm, M8 x 8	1
	T80	87-42		714477	Orifice plug, 0.8mm, M8 x 8	1
37	T20	87-42		11061981	Orificed check valve, 1.37mm	1
	T30	87-42		679506 (8700007)	Spring	1
	T40	87-42		8801303	Spring retainer	1
	T50	87-42		639120	Orifice plug, 1.0mm, M5 x 6	1
	T60	87-42		639120	Orifice plug, 1.0mm, M5 x 6	1
45	T20	87-42		11061958	Orificed check valve, 0.81mm	1
	T30	87-42		679506 (8700007)	Spring	1
	T40	87-42		8801303	Spring retainer	1
	T50	87-42		639153	Orifice plug, 1.3mm, M5 x 6	1
	T60	87-42		598292	Orifice plug, 0.8mm, M5 x 6	1
46	T20	87-42		8801139	Orificed check valve, .026"	1
	T30	87-42		679506 (8700007)	Spring	1
	T40	87-42		8801303	Spring retainer	1
	T50	87-42		598292	Orifice plug, 0.8mm, M5 x 6	1
	T60	87-42		598292	Orifice plug, 0.8mm, M5 x 6	1
49	T20	87-42		11061958	Orificed check valve, 0.81mm	1
	T30	87-42		679506 (8700007)	Spring	1
	T40	87-42		8801303	Spring retainer	1
	T50	87-42		639120	Orifice plug, 1.0mm, M5 x 6	1
	T60	87-42		639120	Orifice plug, 1.0mm, M5 x 6	1
50	T20	87-42		8801139	Orificed check valve, .026"	1
	T30	87-42		679506 (8700007)	Spring	1
	T40	87-42		8801303	Spring retainer	1
	T50	87-42		310771	Orifice plug, 1.2mm, M6 x 6	1
	T70	87-42		517571	Orifice plug, 0.9mm, M6 x 6	1
	T80	87-42		517571	Orifice plug, 0.9mm, M6 x 6	1
59	T20	87-42		8801139	Orificed check valve, 0.026	1
	T30	87-42		679506 (8700007)	Spring	1
	T40	87-42		8801303	Spring retainer	1
	T70	87-42		739144	Orifice plug, 0.8mm, M6 x 6	1
	T80	87-42		739144	Orifice plug, 0.8mm, M6 x 6	1

(74)

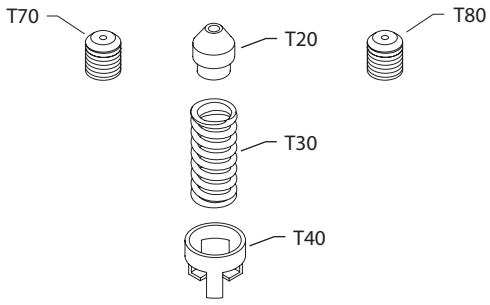

See control drawing for orifice location

(76, 99 & A5)

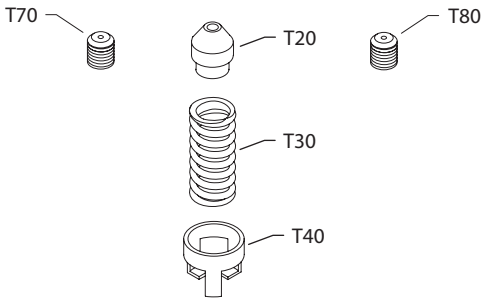

See control drawing for orifice location

(78)

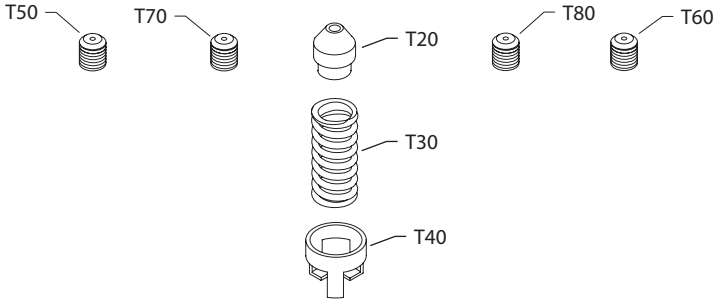

See control drawing for orifice location

(82)

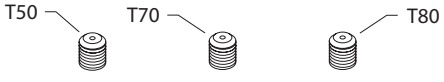

See control drawing for orifice location

(84 & A4)



See control drawing for orifice location

E100 700E

Enlarged **bold** type item numbers are recommended part to stock for servicing.

ORIFICE

Order Code	Item	Date Begin	Date End	Part Number	Part Name	Qty. per Model/Kit
74	T20	89-41		11061958	Orificed check valve, .026″	1
	T30	89-41		679506 (8700007)	Spring	1
	T40	89-41		8801303	Spring retainer	1
	T70	89-41		755793	Orifice plug, 1.0mm, M8 x 8	1
	T80	89-41		755793	Orifice plug, 1.0mm, M8 x 8	1
76	T20	89-41		8801139	Orificed check valve, .026″	1
	T30	89-41		679506 (8700007)	Spring	1
	T40	89-41		8801303	Spring retainer	1
	T70	89-41		578542	Orifice plug, 0.8mm, M6 x 8	1
	T80	89-41		578542	Orifice plug, 0.8mm, M6 x 8	1
78	T20	87-42		8801139	Orificed check valve, 0.81mm	1
	T30	87-42		679506 (8700007)	Spring	1
	T40	87-42		8801303	Spring retainer	1
	T50	87-42		513026	Orifice plug, 1.3mm, M6 x 8	1
	T60	87-42		513026	Orifice plug, 1.3mm, M6 x 8	1
	T70	87-42		578542	Orifice plug, 0.8mm, M6 x 8	1
	T80	87-42		578542	Orifice plug, 0.8mm, M6 x 8	1
82	T50	89-41		310771	Orifice plug, 1.2mm, M6 x 6	1
	T70	89-41		310771	Orifice plug, 1.2mm, M6 x 6	1
	T80	89-41		310771	Orifice plug, 1.2mm, M6 x 6	1
84	T70	89-41		310771	Orifice plug, 1.2mm, M6 x 6	1
	T80	89-41		310771	Orifice plug, 1.2mm, M6 x 6	1
99	T20	89-41		8801301	Orificed check valve, .047″	1
	T30	89-41		679506 (8700007)	Spring	1
	T40	89-41		8801303	Spring retainer	1
	T70	89-41		517572	Orifice plug, 1.5mm, M6 x 6	1
	T80	89-41		517572	Orifice plug, 1.5mm, M6 x 6	1
A4	T70	89-41		578542	Orifice plug, 0.8mm, M6 x 8	1
	T80	89-41		578542	Orifice plug, 0.8mm, M6 x 8	1
A5	T20	89-41		11061970	Control orifice kit, 1.02mm	1
	T30	89-41		679506 (8700007)	Spring	1
	T40	89-41		8801303	Spring retainer	1
	T70	89-41		578542	Orifice plug, 0.8mm, M6 x 8	1
	T80	89-41		578542	Orifice plug, 0.8mm, M6 x 8	1

(B1)

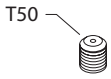

See control drawing for orifice location

(B2)



See control drawing for orifice location

(B4)

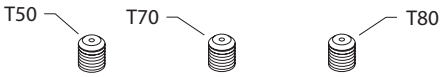

See control drawing for orifice location

(C4)



See control drawing for orifice location

(C5, C6 & C7)

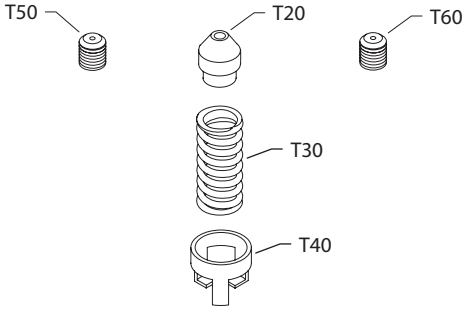

See control drawing for orifice location

(G1)

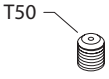

See control drawing for orifice location

(G4)

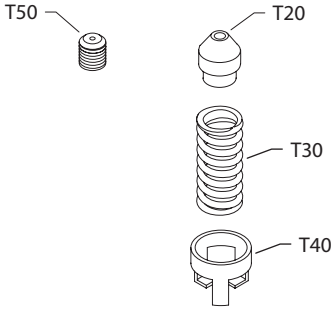

See control drawing for orifice location

E100 936E

ORIFICE

Order Code	Item	Date Begin	Date End	Part Number	Part Name	Qty. per Model/Kit
B1	T50	89-41		507042	Orifice plug, 1.5mm, M6 x 8	1
B2	T70	89-41		310771	Orifice plug, 1.2mm, M6 x 6	1
	T80	89-41		310771	Orifice plug, 1.2mm, M6 x 6	1
B3	T50	89-41		507042	Orifice plug, 1.5mm, M6 x 8	1
	T70	89-41		739144	Orifice plug, 0.8mm, M6 x 6	1
	T80	89-41		739144	Orifice plug, 0.8mm, M6 x 6	1
B4	T50	89-41		507042	Orifice plug, 1.5mm, M6 x 8	1
	T70	89-41		310771	Orifice plug, 1.2mm, M6 x 6	1
	T80	89-41		310771	Orifice plug, 1.2mm, M6 x 6	1
C4	T50	89-41		639161	Orifice plug, 1.4 mm, M5 x 6	1
	T60	89-41		639161	Orifice plug, 1.4 mm, M5 x 6	1
C5	T20	89-41		11061958	Orificed check valve, 0.81mm	1
	T30	89-41		679506 (8700007)	Spring	1
	T40	89-41		8801303	Spring retainer	1
	T50	89-41		639161	Orifice plug, 1.4 mm, M5 x 6	1
	T60	89-41		639161	Orifice plug, 1.4 mm, M5 x 6	1
C6	T20	89-41		11061970	Control orifice kit, 1.02mm	1
	T30	89-41		679506 (8700007)	Spring	1
	T40	89-41		8801303	Spring retainer	1
	T50	89-41		639161	Orifice plug, 1.4 mm, M5 x 6	1
	T60	89-41		639161	Orifice plug, 1.4 mm, M5 x 6	1
C7	T20	89-41		11061981	Control orifice kit, 1.37mm	1
	T30	89-41		679506 (8700007)	Spring	1
	T40	89-41		8801303	Spring retainer	1
	T50	89-41		639161	Orifice plug, 1.4 mm, M5 x 6	1
	T60	89-41		639161	Orifice plug, 1.4 mm, M5 x 6	1
G1	T50	89-41		310771	Orifice plug, 1.2 mm, M6 x 6	1
G4	T20	89-41		8801136	Control orifice kit, .018"	1
	T30	89-41		679506 (8700007)	Spring	1
	T40	89-41		8801303	Spring retainer	1
	T50	89-41		310771	Orifice plug, 1.2 mm, M6 x 6	1

(G8, GB, GD, GF, GJ & Z2)

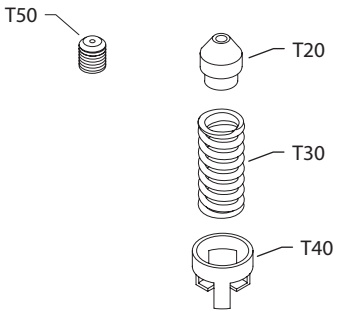

See control drawing
for orifice location

(K1)

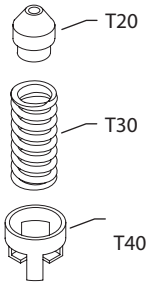

See control drawing
for orifice location

(P1)



See control drawing
for orifice location

(Z1)

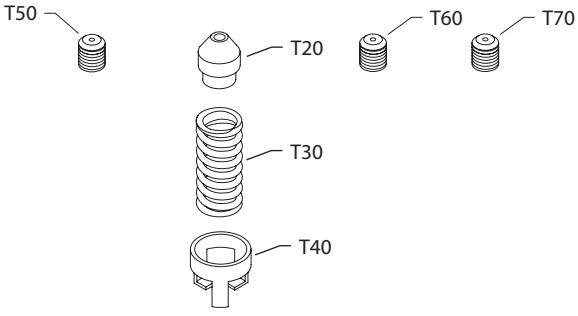

See control drawing
for orifice location

(Z3)

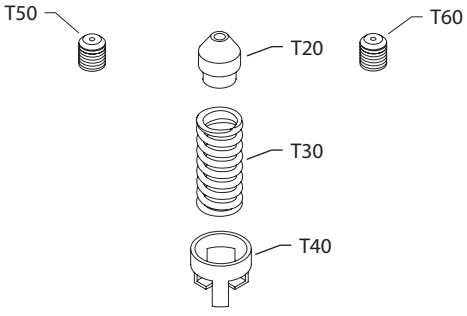

See control drawing
for orifice location

E100 937E

ORIFICE

Order Code	Item	Date Begin	Date End	Part Number	Part Name	Qty. per Model/Kit
G8	T20	89-41		8801139	Orificed check valve, .026″	1
	T30	89-41		679506 (8700007)	Spring	1
	T40	89-41		8801303	Spring retainer	1
	T50	89-41		310771	Orifice plug, 1.2 mm, M6 x 6	1
GB	T20	89-41		11061958	Orificed check valve, 0.81mm	1
	T30	89-41		679506 (8700007)	Spring	1
	T40	89-41		8801303	Spring retainer	1
	T50	89-41		310771	Orifice plug, 1.2 mm, M6 x 6	1
GD	T20	89-41		11061993	Orificed check valve, 1.57mm	1
	T30	89-41		679506 (8700007)	Spring	1
	T40	89-41		8801303	Spring retainer	1
	T50	89-41		310771	Orifice plug, 1.2 mm, M6 x 6	1
GF	T20	89-41		11061970	Control orifice kit, 1.02mm	1
	T30	89-41		679506 (8700007)	Spring	1
	T40	89-41		8801303	Spring retainer	1
	T50	89-41		310771	Orifice plug, 1.2 mm, M6 x 6	1
GJ	T20	89-41		11061981	Control orifice kit, 1.37mm	1
	T30	89-41		679506 (8700007)	Spring	1
	T40	89-41		8801303	Spring retainer	1
	T50	89-41		310771	Orifice plug, 1.2 mm, M6 x 6	1
K1	T20	89-41		11061981	Control orifice kit, 1.37mm	1
	T30	89-41		679506 (8700007)	Spring	1
	T40	89-41		8801303	Spring retainer	1
P1	T70	11-40		508014	Orifice plug, 1.0mm, M6 x 6	1
	T80	11-40		508014	Orifice plug, 1.0mm, M6 x 6	1
Z1	T20	89-41		11061958	Control orifice kit, 0.81mm	1
	T30	89-41		679506 (8700007)	Spring	1
	T40	89-41		8801303	Spring retainer	1
	T50	89-41		519659	Orifice plug, 1.0mm, M6 x 6	1
	T60	89-41		519659	Orifice plug, 1.0mm, M6 x 6	1
	T70	89-41		519659	Orifice plug, 1.0mm, M6 x 6	1
Z2	T20	89-41		11061958	Control orifice kit, 0.81mm	1
	T30	89-41		679506 (8700007)	Spring	1
	T40	89-41		8801303	Spring retainer	1
	T50	89-41		739144	Orifice plug, 0.8mm, M6 x 6	1
Z3	T20	89-41		11061970	Control orifice kit, 1.02mm	1
	T30	89-41		679506 (8700007)	Spring	1
	T40	89-41		8801303	Spring retainer	1
	T50	89-41		519659	Orifice plug, 1.0mm, M6 x 6	1
	T60	89-41		519659	Orifice plug, 1.0mm, M6 x 6	1

OVERHAUL SEAL KIT

Order Code	Item	Date Begin	Date End	Part Number	Part Name	Qty. per Model/Kit
		87-42		11095646	Seal kit, base pump, 42cc	1
	B90	87-42		9803390	Filter screen	1
	C70	87-42		648477	Screw	4
	E40	87-42		517862 (9003509-0006)	Seal nut, M6	2
	E50	87-42		517376	O-ring	1
	E60	87-42		517229	Screw (SB-1994-018)	6
	F11	90-51		350397 (9004100-1220)	O-ring	2
	F12	90-51		507796	Piston ring	2
	F40	87-42		706242	O-ring	2
	F50	87-42		338517	O-ring	2
	F112	87-42		505412 (9003509-0008)	Seal nut, M8	1
	F124	87-42		612291 (9003508-0008)	Seal nut, M8	1
	F212	87-42		505412 (9003509-0008)	Seal nut, M8	1
	G30	89-17		512833	End cap gasket	1
	J40	87-42		680892 (9004104-0440)	O-ring	1
	J50	87-42		056739 (9004104-1580)	O-ring	1
	K50	87-42		001149 (9004201-6200)	O-ring, .755 x .097, nitrile, 90D	1
	L25	92-16		11060010	Seal carrier assembly	1
	N15	87-42		001156 (9004201-7500)	O-ring, .924 x .116, nitrile, 90D	1
	P02	87-02		141564 (9004100-0170)	O-ring, .676 x .070, nitrile, 70D	2
	P06	87-42		000836 (9004100-0200)	O-ring, .864 x .070, nitrile, 70D	2
	P13	87-42		544742 (9004105-0190)	O-ring, .801 x .070, viton, 90D	2

Series 90 42 cc Axial Piston Pump Service Parts Manual
Service Bulletin: SB-1988-023

PRODUCTS AFFECTED

Series 90 pumps and motors

SUBJECT

Piston improvement

DESCRIPTION

Product Information Bulletin PIB-8801 (March, 1988) announced the incorporation of fabricated (welded) piston assemblies, replacing non-fabricated (hollow) piston assemblies, in the cylinder blocks of all Series 90 pumps and motors. This change increases the overall efficiency of the Series 90 product line.

To simplify service parts inventory for all Series 90 units, only individual welded piston assemblies will be available as spare parts. The hollow pistons will be obsoleted. Part numbers for individual welded piston assemblies are listed in this bulletin.

Since all Series 90 pumps and motors have nine (9) pistons, welded pistons being used to replace hollow pistons during repair MUST be install in the cylinder block symmetrically, in multiples of three (3).

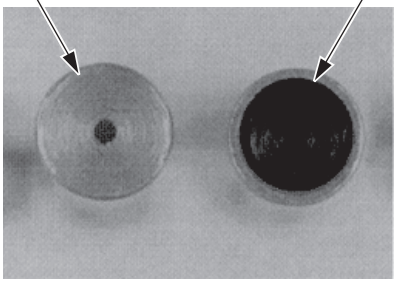

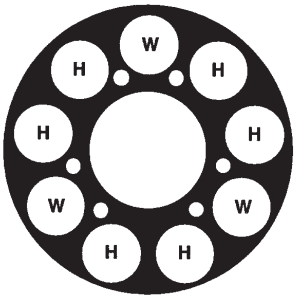

When replacing hollow pistons with welded pistons, it is mandatory that the welded pistons be incorporated symmetrically in multiples of three.

MODELS AFFECTED

All series 90 pumps and motors: 93-xxxx, 94-xxxx, 95-xxxx, and 96-xxxx pumps

SERIAL NUMBERS

Welded pistons will be incorporated into all series 90 pumps and motors by the end of the first quarter of 1998.

PART NUMBERS AFFECTED

Part number	Description
706101	Piston assembly, welded - 42 cc
367672	Piston assembly, welded - 55 cc
708230	Piston assembly, welded - 75 cc
364000	Piston assembly, welded - 100 cc

PARTS DISPOSITION

■ Interchangeable

Series 90 42 cc Axial Piston Pump Service Parts Manual

Service Bulletin: SB-1989-002

PRODUCTS AFFECTED

Series 90 pumps

SUBJECT

Incorporation of adjustable charge relief valve

DESCRIPTION

As a product improvement Sauer-Danfoss is incorporating an adjustable charge relief valve on all series 90 variable displacement pumps. This design replaces the previous shim adjustable charge relief valve. The new design valve provides a range of pressure adjustment which covers the available charge pressure options of 290, 348, and 406 psi [20, 24, and 28 bar].

Note: This improvement changes the design of the charge relief valve poppet and plug. The new style charge relief may protrude from the pump end cap approximately 0.27 in [6.9 mm] farther than the shim adjustable design.

To adjust the new design valve, first install a gauge to measure charge pressure as described in the series 90 service manual. Loosen the adjustment lock nut with a 1-1/16 in hex wrench. Operate the pump at an input speed of 1700 to 2000 rpm and turn the adjustment plug with a large screwdriver while observing the charge pressure. Clockwise rotation of the plug increases the setting, while counterclockwise rotation decreases the setting at a rate of approximately 50 psi [3.4 bar] per turn. Once the desired setting is achieved, torque the lock nut to 34-41 lbf·ft [46-55 Nm], and remove the charge pressure gauge.

Sauer-Danfoss will offer an adjustable charge relief valve kit for sale as a service part. This kit can be used to service any vintage series 90 variable pump. Since the new and old style charge relief valves are interchangeable as an assembly, the old style parts will no longer be available as service parts.

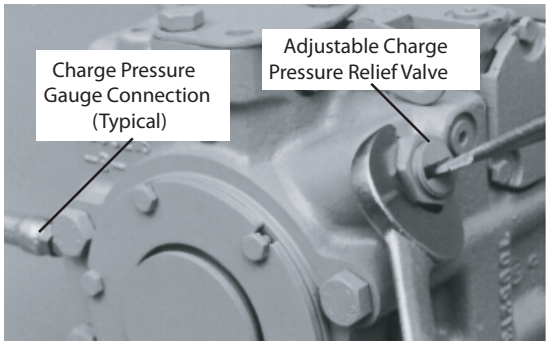

Adjusting Charge Relief Valve

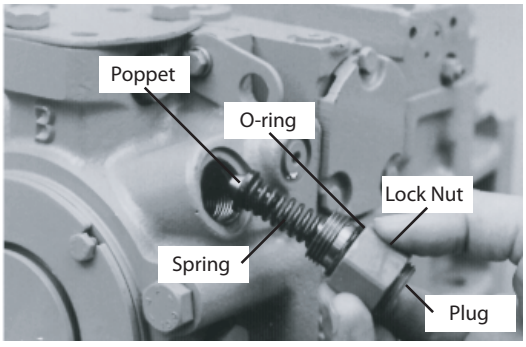

Charge Relief Valve Assembly

MODELS AFFECTED

All 93-2xxx, 94-2xxx, 95-2xxx, and 96-2xxx pumps

SERIAL NUMBERS

Due to the interchangeability of the charge relief valve assemblies, this is a running change. It will be incorporated into all series 90 variable pumps by March of 1989.

PART NUMBERS AFFECTED

Part number	Description
8002K000-A	Adjustable charge relief valve kit - new style (includes poppet, spring, plug, O-ring, and nut)

PARTS DISPOSITION

■ Interchangeable (as an assembly)

Series 90 42 cc Axial Piston Pump
Service Parts Manual
Service Bulletin: SB-1991-007

PRODUCTS AFFECTED

Series 90 42 cc variable pumps

SUBJECT

Servo system change

DESCRIPTION

The servo piston diameter (area) has been increased on series 90 42 cc pumps. This improvement will lower the servo pressure required to stroke the pump.

This change creates non-interchangeability of servo sleeves, servo sleeve kits, servo pistons, and servo piston seal rings.

Old style parts will remain available as service parts.

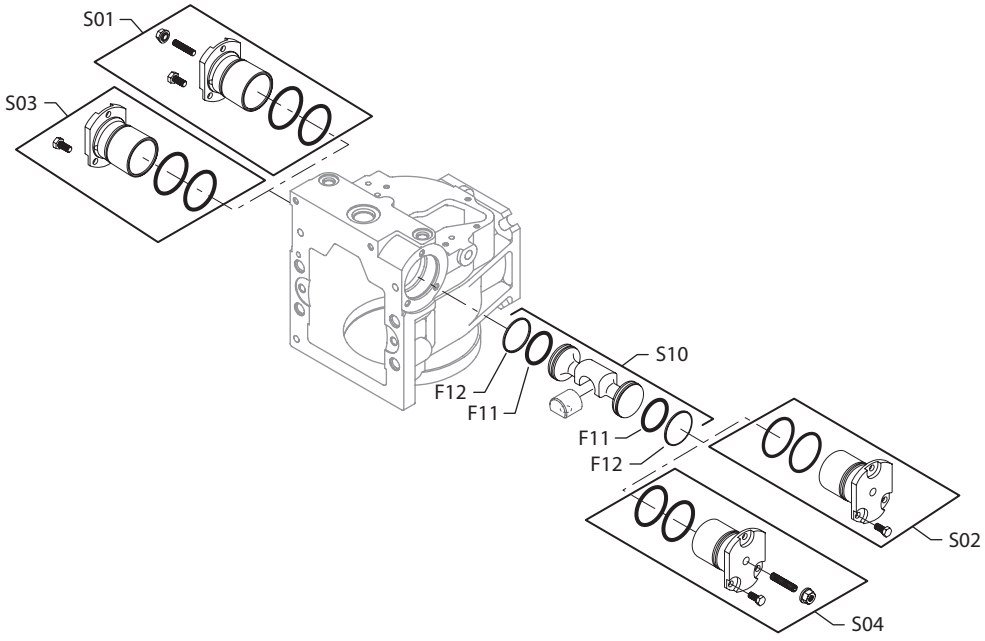

MODELS AFFECTED

All 93-2xxx variable pumps

SERIAL NUMBERS

Change incorporated at serial number N-90-51-xxxxx

PART NUMBERS AFFECTED

Item	Description	Old style p/n (Prior to N-90-51)	New style p/n (N-90-51 & later)
S01 & S04	Servo sleeve kit - adjustable	8052F004-A	8052F004-B
S02 & S03	Servo sleeve kit - No limitation	8052F003-A	8052F003-B
S10	Servo piston kit	80520S10	80520S10-A
F11	O-ring	9004100-1210	9004100-1220
F12	Piston ring	648345	350454

PARTS DISPOSITION

■ Non-interchangeable

Series 90 42 cc Axial Piston Pump Service Parts Manual

Service Bulletin: SB-1992-008

PRODUCTS AFFECTED

Series 90 pumps

SUBJECT

Incorporation of adjustable charge relief valve

DESCRIPTION

As part of our overall series 90 product improvement program, numerous components are being redesigned. This redesign is referred to as a "block point" change. The objective of the block point change is to minimize the number of times we change the units while we convert to high volume tooling at various plant sites. These design improvements will provide increased reliability and more application flexibility. The nature of these changes makes customer requalification unnecessary. Old style (pre-block point) variable housings and end caps will no longer be available as spare parts.

MODELS AFFECTED

All 93-2xxx pumps

SERIAL NUMBERS

N/A

PART NUMBERS AFFECTED

Refer to next page of this bulletin for specific part numbers

Housing:	Thickness adjacent to the side cover has been increased
Side cover:	Thickness increased to match change in housing.
End cap:	Match housing change.
Input shaft:	A 19 tooth option, thus a larger shaft roller bearing. Shaft seal hardware changed to accommodate new bearing and commonize the design with larger displacement units.
Charge pump:	Charge pump shaft and cover changed for commonality with the larger displacement units
SAE "B" pad	New charge pump shaft accommodates revised auxiliary pad drive couplings

PARTS DISPOSITION

■ Not Applicable

FRAME SIZE: 042 - PARTS AFFECTED

Item	Description	Pre-block point part number	New part number 92-12 & later
Common parts group, 42 cc			
B10	Variable housing	325050 (O)	503422
E10	Side cover	671602 (I & O)	751305
E20	Leveler	673897	731984
L10	Bearing	690305	357616
L20	Retaining ring	392134	9006300-0137
L30	Seal carrier	N/A	340356
L35	Seal carrier	689521	Deleted
L40	Lip seal	656280	9008000-0118
L50	O-ring	9004104-0360	780247
L60	Retainer plate	N/A	340349
L70	Screw	9007210-0604	746208
End cap group: G			
G048	End cap, twin ports	333179 (O)	769562
G20	Journal bearing	648030	343830
G958	Screw	508994	500641
G968	Screw	36178 (I)	354407
Charging system group: H (affects options B, C, and L)			
H50	Charge pump shaft	715243	340364
Auxiliary mounting, 'A' flange, 9 tooth			
J10	Coupling	323972	341016
J15	Cover assembly	347542	347567
J30	Bushing	648055	8700008
Auxiliary mounting, 'B' flange, 13 tooth			
J10	Coupling	324228	341024
J15	Cover assembly	347542	347567
J30	Bushing	648055	8700008
J60	Flange adapter	664094	340539
Auxiliary mounting,none			
J15N	Cover assembly	717264	347559
J30	Bushing	648055	8700008
Auxiliary mounting, 'B-B' flange, 15 tooth			
J10	Coupling	664060	342907
J15	Cover assembly	347542	347567
J30	Bushing	648055	8700008
J60	Flange adapter	664094	340539
Input shaft: L			
L1C3	Shaft, 15T 16.32	689414	340521
L1T3	Shaft, 1.0 taper	309088	342915
Special hardware: W			
B83	Speed pickup plug	N/A	9005110-5600

(I) Interchageable
(O) Obsolete

Service Bulletin: SB-1993-002

PRODUCTS AFFECTED

Series 90 pump: All frame sizes

SUBJECT

Control gasket changes for MCV115 hydraulic displacement control

DESCRIPTION

In October of 1992, Sauer-Danfoss began offering a new style hydraulic displacement control (MCV115) that is a direct replacement for the MCV112,

The control gasket also changed, and the new style gasket must be used with the MCV115 control. The old style gasket is to be used with the MCV112 control, all manual displacement controls, and MCV111 electric displacement controls.

WARNING
Failure to use the appropriate gasket may result in uncontrolled pump displacement

30cc/42cc/55cc	75cc/100cc/130cc
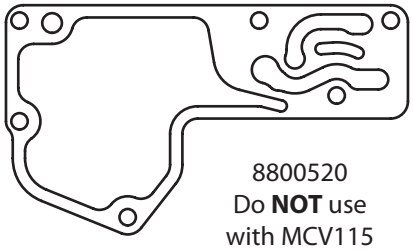 8800520 Do **NOT** use with MCV115	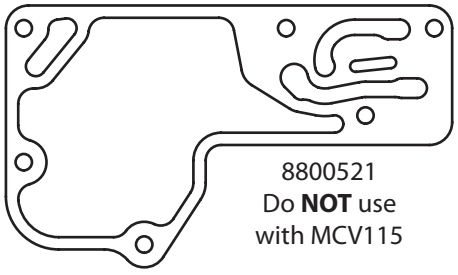 8800521 Do **NOT** use with MCV115
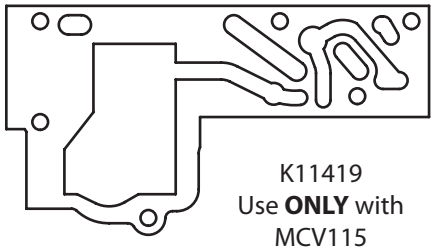 K11419 Use **ONLY** with MCV115	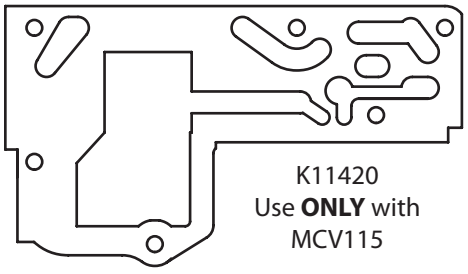 K11420 Use **ONLY** with MCV115

MODELS AFFECTED

All 93-2xxx, 94-2xxx, 95-2xxx, 96-2xxx, and 97-2xxx pumps

SERIAL NUMBERS

October 1992 and beyond

PART NUMBERS AFFECTED

Frame size	Control gasket for EDC (MCV111)	Control gasket for HDC (MCV112)	(MCV115)	Control gasket for MDC (8x02M0Mx)
30/42/55 cc	8800520	8800520	K11419	8800520
75/100/130 cc	8800521	8800521	K11420	8800521

PARTS DISPOSITION

■ Non-interchangeable

Service Bulletin: SB-1993-012

PRODUCTS AFFECTED

All Series 90 pumps

SUBJECT

Removeal of valve plate from cylinder block kit

DESCRIPTION

Due to the increasing number of valve plate options, the valve plate (item C80) will be no longer included in the cylinder block kit (item S07) on all series 90 variable pumps. Valve plates must be ordered separately for service parts. See special hardware features group in your Service Parts Manual for the appropriate valve plate number.

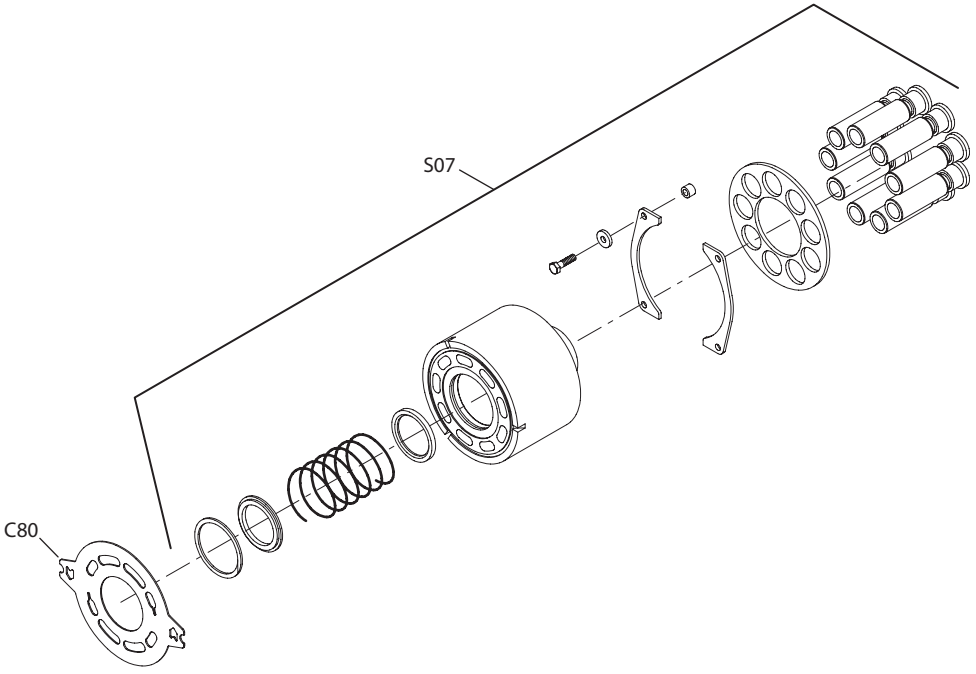

MODELS AFFECTED

All 93-2xxx, 94-2xxx, 95-2xxx, 96-2xxx, 97-2xxx variable pumps

SERIAL NUMBERS

Not applicable

PART NUMBERS AFFECTED

Frame size	Cylinder block kit
42 cc	80520S07
55 cc	80020S07
75 cc	81020S07
100 cc	82020S07
130 cc	83020S07

PARTS DISPOSITION

■ Not Applicable

Series 90 42 cc Axial Piston Pump Service Parts Manual
Service Bulletin: SB-1993-015A

PRODUCTS AFFECTED

Series 90 pump: All frame sizes

SUBJECT

Servo arm interference with speed sensor ring

DESCRIPTION

Note: This service bulletin revision adds the 42 cc frame size and the incorporation date of 55 thru 1000 cc.

A potential interference problem has been identified in series 90 42, 55, 75, and 100 cc frame size pumps built since early 1992. Interference may occur between the swashplate hold down bracket on the servo arm and the speed sensor ring, which may be installed on the cylinder block as an option.

A new hold down bracket has been designed to provide clearance for the speed sensor ring.

If a cylinder block with speed ring must be installed in one of the subject pumps, a servo arm assembly with the new hold down will also be required.

Sometime during the first quarter of 1994, all 55, 75, and 100 cc pumps will be equipped with the new design hold down bracket. The 42 cc pumps will implement the new design hold down bracket in the second quarter of 1994.

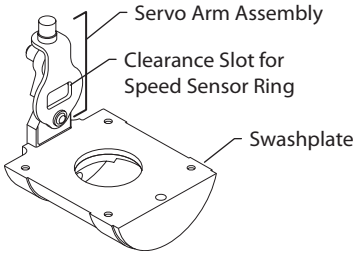

MODELS AFFECTED

All 93-2xxx, 94-2xxx, 95-2xxx, and 96-2xxx variable pumps

SERIAL NUMBERS

42 cc at serial number 92-16-xxxxx
55 cc at serial number 92-06-xxxxx
75 cc at serial number 92-17-xxxxx
1000 cc at serial number 92-12-xxxxx

All 55, 75 and 100 cc pumps built in Ames beginning with s/n A-94-11-xxxxx will have the new servo arm assembly installed. 100 cc pumps built in Neumunster will also incorporate on this date. The75 cc pumps built in Neummunster will incorporate on N-94-14-xxxxx 42 cc pumps will incorporate on N-94-36-xxxxx.

PART NUMBERS AFFECTED

Frame size	Old servo arm (no slot in bracket)	New servo arm (with slot in bracket)
42 cc	354282	502976
55 cc	8000191	8000318
75 cc	8100366	8100499
100 cc	8200182	8200268

PARTS DISPOSITION

■ Non-interchangeable - Pumps with speed sensor ring must use the new servo arm.

PRODUCTS AFFECTED

Series 90 variable pumps

SUBJECT

Side cover washer elimination

DESCRIPTION

The washers located under the side cover screws have been removed on all series 90 42 thru 130 cc variable pumps.

As before, the side cover screws must be replaced if they are removed for any reason. The special coating, which seals and retains the screws, wears off when the screws are removed.

The screw length changed on 55 thru 100 cc pumps, so it is important that the washers are discarded during repair. The proper screw is included in the overhaul seal kits.

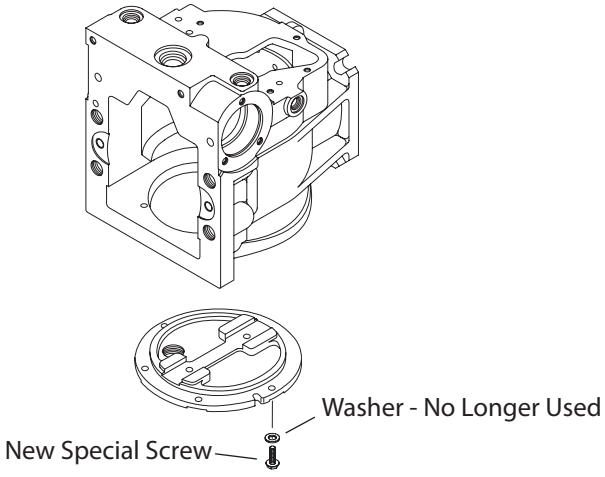

MODELS AFFECTED

All 93-2xxx, 94-2xxx, 95-2xxx, 96-2xxx, and 97-2xxx variable pumps

SERIAL NUMBERS

Change took place during the 2nd and 3rd quarter of 1994

PART NUMBERS AFFECTED

Pump size	Old screw	New screw
42 cc	648477	Same part number
55-100 cc	9007276-0115	5000206
130 cc	308700	Same part number

PARTS DISPOSITION

■ Interchangeable

PRODUCTS AFFECTED

Series 90 42 cc variable pumps

SUBJECT

Charge pump shaft key change

DESCRIPTION

As a product improvement, Sauer-Danfoss has made a design change to the charge pump shaft and woodruff key used on 42 cc variable pumps

The new key is smaller to eliminate a potential interference problem. The old charge pump shaft will be obsoleted and no longer available as a service part.

This is an interchangeable change within the affected serial number range, if the charge pump shaft and key are replaced together.

	Width "A" mm (in)	Length "B" mm (in)
Old key	3.14 (0.1235)	12.70 (0.500)
New key	3.09 (0.1215)	9.53 (0.375)

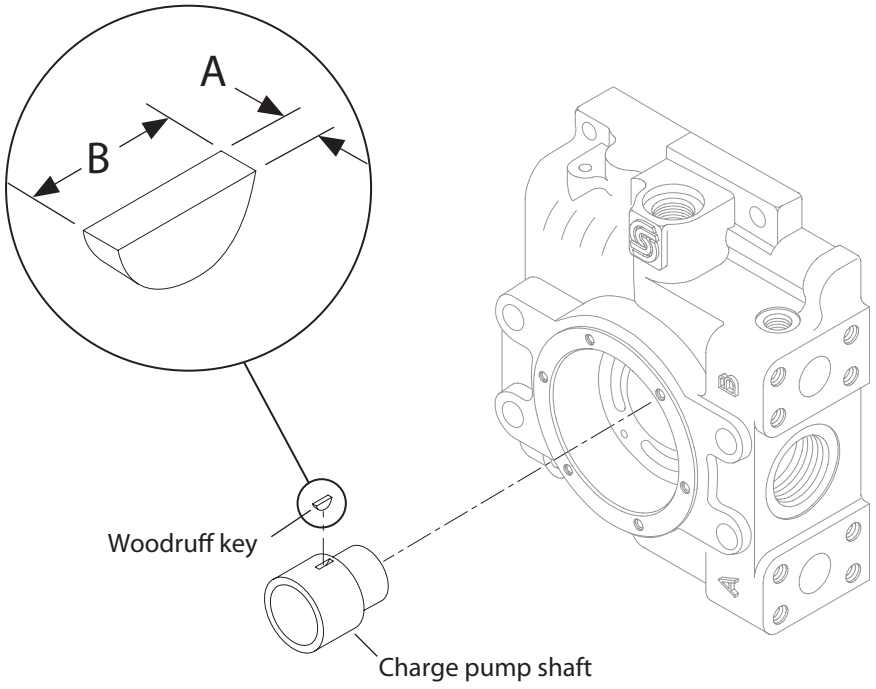

MODELS AFFECTED

All 42 cc variable pumps

SERIAL NUMBERS

Serial number N-92-16-xxxxx and beyond

PART NUMBERS AFFECTED

Description	Old part number	New part number
Woodruff key	9003310-1208	9003310-1206
Charge pump shaft	340364	505202

PARTS DISPOSITION

■ Interchangeable if BOTH charge pump shaft and woodruff key are changed

Series 90 42 cc Axial Piston Pump
Service Parts Manual
Service Bulletin: SB-1995-003

PRODUCTS AFFECTED

Series 90 variable pumps - all frame sizes

SUBJECT

Manual displacement control (MDC) with DC electric solenoid override

DESCRIPTION

In order to accommodate our European customers, the manifold which attaches to the front of the manual displacement control (MDC) housing is being changed.

The European solenoid valve requires a thicker manifold to provide clearance between the solenoid and the front of the MDC housing. The revised manifold will protrude closer to the mounting flange of the pump, reducing dimension "A" shown in the accompanying drawing by approximately 5 mm [0.2 in]. Please see chart below for specific clearances.

The thicker manifold requires longer screws and may be used with either the U.S. or European sourced solenoid.

This change will become effective during March of 1995. The old manifold will be obsoleted and no longer available as a service part.

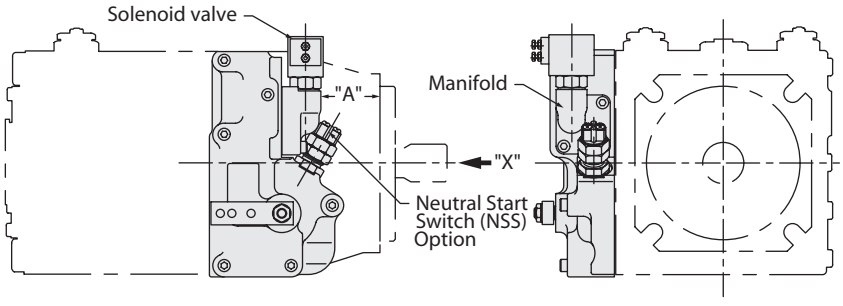

Series 90
Manual displacement control
with DC solenoid override

Frame size		42	55	75	100	130
Dimension "A"	Current	39.9 [1.57]	55.9 [2.20]	54.1 [2.13]	60.2 [2.37]	74.4 [2.93]
mm [in]	Future	34.9 [1.37]	50.9 [2.0]	49.1 [1.93]	55.2 [2.17]	69.4 [2.73]

MODELS AFFECTED

All series 90 variable pumps using MDC with DC electric solenoid override.

SERIAL NUMBERS

Change will take place in March 1995.

PART NUMBERS AFFECTED

Description	Current part number	New part number	Quantity
Manifold	8800365	505022	1
Screw	9007314-0605	9007314-0606	2

PARTS DISPOSITION

■ Interchangeable (new manifold requires longer screws)

Series 90 42 cc Axial Piston Pump
Service Parts Manual
Service Bulletin: SB-1995-004

PRODUCTS AFFECTED

Series 90 42 cc variable pumps

SUBJECT

Charge pump design change

DESCRIPTION

To improve efficiency and reliability, the number of charge pump parts in the series 90 42cc pump is being replaced. The charge pump design is being changed to make the otter port plate an integral part of the charge pump cover and to eliminate the distance plates.

For auxiliary pad options, the new charge pump cover is rotation dependent. The cover will be marked either left hand (L) or right hand (R). The non-auxiliary pad cover is not rotation dependent.

The complete charge pump assembly can be interchanged with corresponding hardware from 92-16 and beyond. **However, piece parts are not interchangeable**. For units prior to 95-16, consult Sauer-Danfoss.

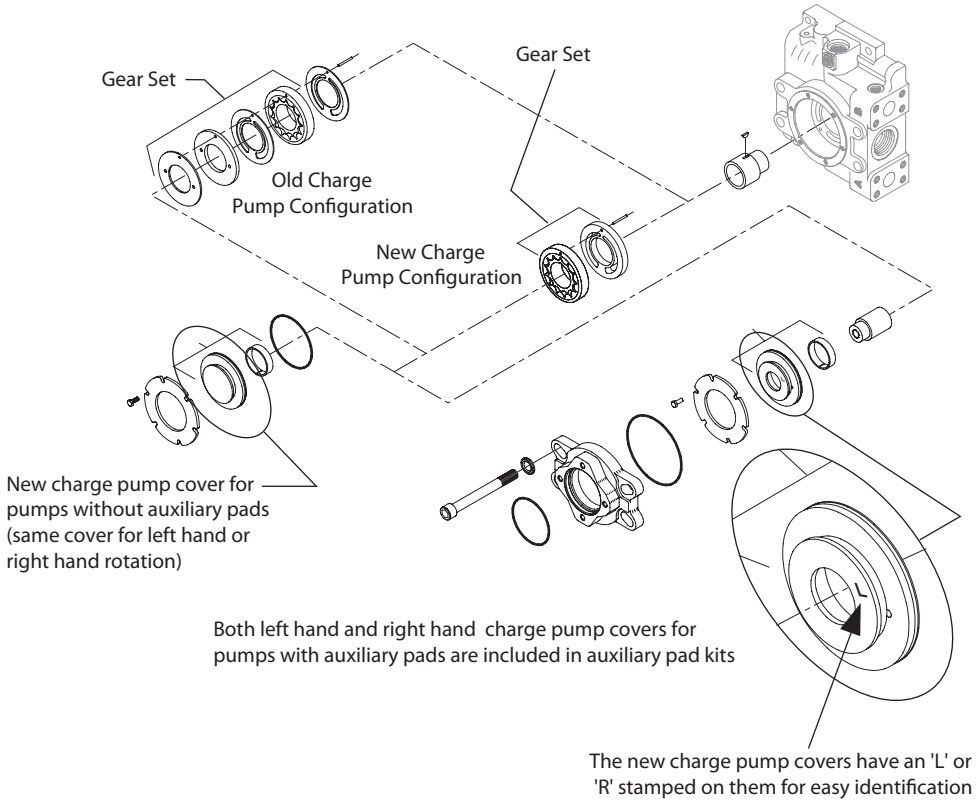

Series 90 42 cc Axial Piston Pump Service Parts Manual
Service Bulletin: SB-1995-004

MODELS AFFECTED

All 42 cc variable pumps

SERIAL NUMBERS

Units built between N-92-16-xxxxx and N-94-12-xxxxx

PART NUMBERS AFFECTED

The following information must be known to determine the correct charge pump replacement kit:

1. Charge pump displacement (11 or 14 cc)
2. Auxiliary pad (yes or no)
3. Rotation (LH or RH)

Obsolete charge pump parts		Chg. pump displacement	Auxiliary pad	Rotation	Replacement kit
Gear set	Cover				
8052043	347559	11 cc	No	LH or RH	8510078
	347567		Yes	LH	8510079
	347567		Yes	RH	8510080
8052044	347559	14 cc	No	LH or RH	8510081
	347567		Yes	LH	8510082
	347567		Yes	RH	8510083

The following information pertains to "L" charge pump option only:

Old cover (92-16 to 94-12)	Auxiliary pad	Rotation	Replacement cover
347559	No	LH or RH	8800834
347567	Yes	LH	8800833
347567	Yes	RH	8800832

PARTS DISPOSITION

- Interchangeable for manufacture date 92-16 and beyond. Piece parts are <u>not</u> interchangeable.

Series 90 42 cc Axial Piston Pump
Service Parts Manual
Service Bulletin: SB-1995-005

PRODUCTS AFFECTED

Series 90 42 cc variable pumps

SUBJECT

Obsolete servo system parts

DESCRIPTION

The servo piston diameter was increased on series 90 42 cc pumps in 1990. The old style parts are being obsoleted and will no longer be available as service parts. A kit containing the necessary replacement parts has been created. Refer to page two of this bulletin for the appropriate kit part number.

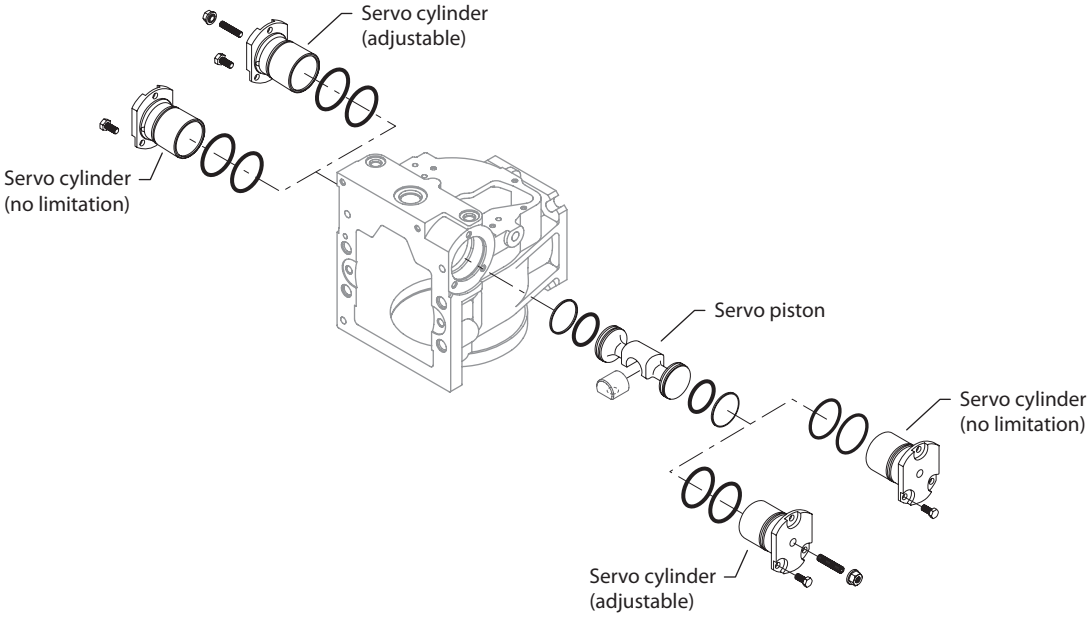

MODELS AFFECTED

All 42 cc variable pumps

SERIAL NUMBERS

Units built prior to serial number N-90-51-xxxxx

PART NUMBERS AFFECTED

Description	Old style p/n	Replacement p/n
Servo sleeve kit - No limitation	8052F003-A	8510089
Servo sleeve kit - adjustable	8052F004-A	8510090
Servo piston kit	80520S10	8510089* or 8510090*

* The new servo piston hardware is included in these kits and must be used with the new servo cylinders. If a servo piston is required, the appropiate displacement limiter must be ordered.

PARTS DISPOSITION

■ Non-interchangeable

Series 90 42 cc Axial Piston Pump
Service Parts Manual
Service Bulletin: SB-1995-006

PRODUCTS AFFECTED

Series 90 42 cc variable pumps

SUBJECT

End cap bolt size change

DESCRIPTION

As a product improvement, Sauer-Danfoss is changing the screws that fasten the end cap to the pump housing from M10 to M12.

This change will require a new housing, end cap gasket, end cap, auxiliary mounting pad flange, and screws.

The new end cap and gasket can be used the old housing if hardened washers are used with the M10 end cap screws.

The new auxiliary mounting pad flange can be used with the old end cap and housing if hardened washers are used with the M10 end cap screws. The auxiliary mounting pad kits will include both the new washers and hardened washers for the M10 screws.

The new housing can only be used with all new style parts.

The old style housing will remain available as a service part as long as inventory lasts. All other parts will be obsoleted and no longer available.

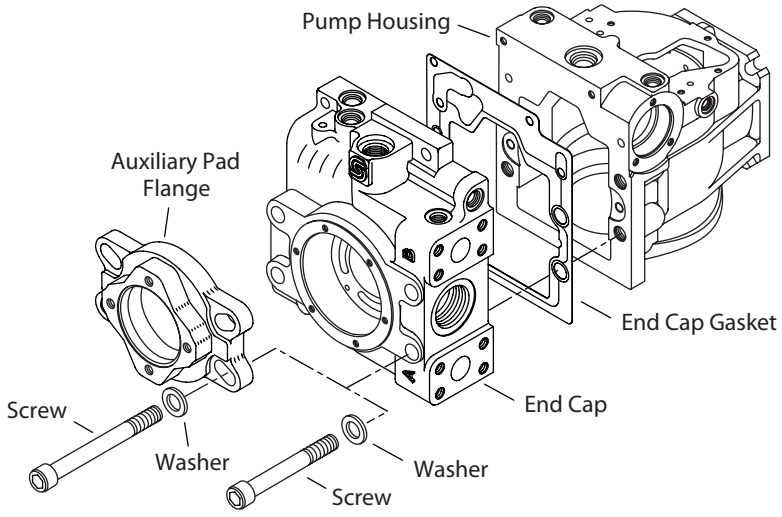

MODELS AFFECTED

All 42 cc variable pumps

SERIAL NUMBERS

Units built between serial number N-92-16-xxxxx and N-95-14-xxxxx.

PART NUMBERS AFFECTED

Description	Old style p/n	New style p/n
End cap	769562	506785
End cap gasket	792937	506698
Screws (with auxiliary mounting pad)	321893	913590
Screws (without auxiliary mounting pad)	321661	506800
Washer	294462	506753
Hardened washer for M10 screws	N/A	294462
Pump housing	792705	506740

Note: Auxiliary mounting pad kit part numbers will not change.

Series 90 42 cc Axial Piston Pump
Service Parts Manual
Service Bulletin: SB-1995-026

PRODUCTS AFFECTED

Series 90 42 cc - 130 cc variable pumps

SUBJECT

Standard valve plate part number change

DESCRIPTION

As a product improvement, Sauer-Danfoss is changing the standard valve plate used in series 90 42 thru 130 cc variable pumps. (refer to PIB-9507)

The purpose of this bulletin is notification of part number changes for the order codes affected. During unit repair, do not replace the new style valve plate with an old style valve plate. However, the old style may be replace with a new style valve plate.

The old style valve plates will be obsoleted and no longer available as a service part.

MODELS AFFECTED

All 932xxx, 942xxx, 952xxx, 962xxx, and 972xxx variable pumps

SERIAL NUMBERS

This change became effective at serial number N-95-48-xxxxx

PART NUMBERS AFFECTED

Unit	Old order code	Old valve plate part number	New order code	New valve plate part number
42 cc	NNN	500337	GBA	758383
55 cc	NNN	8000071	GBA	8000431
75 cc	NNN	8100145	GBA	501332
100 cc	NNN	8200041	GBA	501327
130 cc	NNN	700203	GBA	758425

PARTS DISPOSITION

■ Interchangeable - do NOT substitute the old valve plate for the new valve plate

Series 90 42 cc Axial Piston Pump
Service Parts Manual
Service Bulletin: SB-1996-004

PRODUCTS AFFECTED

Series 90 42, 130, 180, and 250 cc variable pumps

SUBJECT

Side cover design change

DESCRIPTION

As a product improvement, Sauer-Danfoss is changing the side cover and swashplate leveler (T-bar) guide post design.

The new design side cover will have two hardened inserts in the machined slot which serves as a guide for the swashplate leveler, and modified guide posts. The swashplate leveler does not change.

Old guide posts will remain available for service requirements of pumps with the old design side cover.

The old style side cover will be obsoleted and no longer available as a service part. A service kit has been created for replacing the old design side cover. The kit includes the new side cover, guide posts, and inserts. **Piece parts are not interchangeable.**

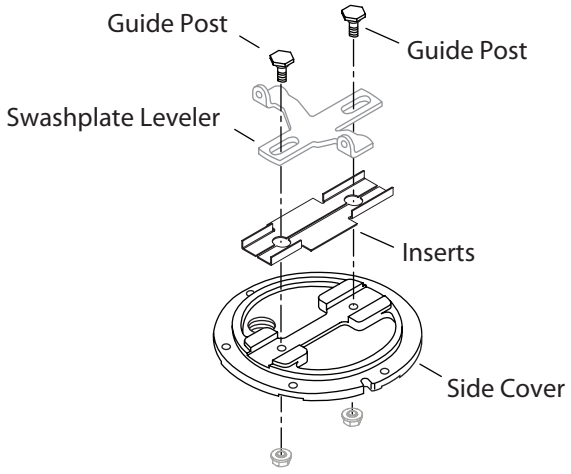

MODELS AFFECTED

All 42, 130, 180, and 250 cc variable pumps

SERIAL NUMBERS

This change became effective at serial number N-96-08-xxxxx.

PART NUMBERS AFFECTED

	Old part numbers		New part numbers		
Description	Guide post	Side cover	Insert ass'y	Guide post	Side cover kit
42 cc	344465	751305	506916	506369	506380
130 cc	503205	746107	83000004	506368	506289
180 cc	503205	746404	506914	506368	506290
250 cc	503205	746404	506914	506368	506290

PARTS DISPOSITION

■ Interchangeable - piece parts are <u>not</u> interchangeable

Series 90 42 cc Axial Piston Pump Service Parts Manual
Service Bulletin: SB-1997-014

PRODUCTS AFFECTED

Series 90 42, 130, 180, and 250 cc variable pumps

SUBJECT

Charge pump shaft part number change

DESCRIPTION

As a product improvement, Sauer-Danfoss has changed the design of the change pump shaft used in series 90 42, 130, 180, and 250 cc variable pumps.

The new and old shafts are interchangeable.

The old style charge pump shaft will become obsolete and no longer available as a service part.

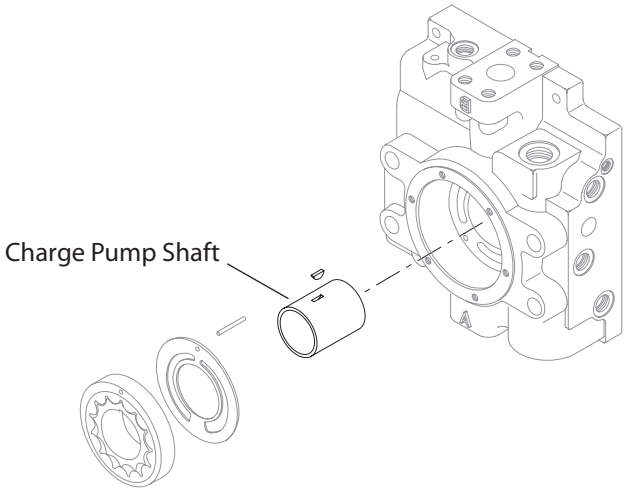

MODELS AFFECTED

All 932xxx, 972xxx, 982xxx, and 992xxx variable pumps

SERIAL NUMBERS

See table below

PART NUMBERS AFFECTED

Frame size	Old shaft part number	New shaft part number	Effectivity date
42	505202	509485	97-06
130	501399	509483	97-06
180	503519	509484	97-12
250	504439	509482	97-12

PARTS DISPOSITION

■ Interchangeable

Series 90 42 cc Axial Piston Pump Service Parts Manual

Service Bulletin: SB-1999-041A

PRODUCTS AFFECTED

Series 90 variable pumps

SUBJECT

Change to side cover insert material

DESCRIPTION

As a product improvement, Sauer-Danfoss has changed the side cover insert material to improve wear characteristics. The new material is more wear resistant than the previous material.

In order to track this change, new part numbers have been created and the old part numbers will be obsolete.

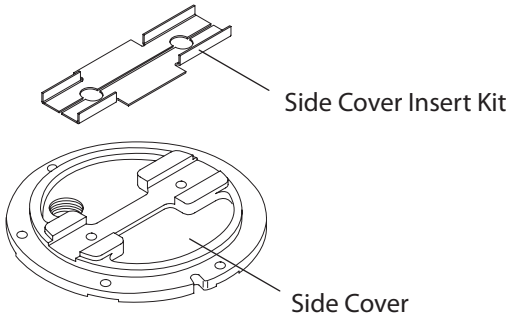

MODELS AFFECTED

93-2xxxx, 94-2xxxx, 95-2xxxx, 96-2xxxx, 97-2xxxx, 98-2xxxx, and 99-2xxxx

SERIAL NUMBERS

Frame size	NMS effectivity date	Ames effectivity date
42 cc	N-99-36-xxxxx	N/A
55 cc	N-00-18-xxxxx	A-00-18-xxxxx
75 cc	N-99-26-xxxxx	A-00-38-xxxxx
100 cc	N-99-31-xxxxx	A-00-38-xxxxx
130 cc	N-99-33-xxxxx	N/A
180 cc	N-99-36-xxxxx	N/A
250 cc	N-99-36-xxxxx	N/A

PART NUMBERS AFFECTED

Frame size	Old part number	New part number
42 cc	506916	513885
55 cc	8000406	513886
75 cc	8000562	513888
100 cc	8200321	513889
130 cc	8300004	513890
180 cc	506914	513891
250 cc	506914	513891

PARTS DISPOSITION

■ Interchangeable

Series 90 42 cc Axial Piston Pump
Service Parts Manual
Service Bulletin: SB-2002-016

PRODUCTS AFFECTED Series 90 42 cc variable pumps

SUBJECT Swashplate change in material heat treatment

DESCRIPTION Sauer-Danfoss has changed the heat treatment process of the swashplate in the series 90 42 cc pump. The new swashplate and old swashplate are interchangeable.

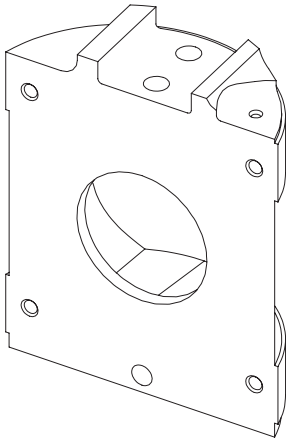

MODELS AFFECTED All series 90 42 cc variable pumps

SERIAL NUMBERS This change became effective at serial number N-01-43-xxxxx.

PART NUMBERS AFFECTED

Old part number	New part number
509630	516199

PARTS DISPOSITION ■ Interchangeable

PRODUCTS AFFECTED

Series 90 42 thru 100 cc pumps

SUBJECT

Auxiliary flange charge pump cover

DESCRIPTION

Sauer-Danfoss will no longer mark auxiliary flange charge pump cover with an "R" for right hand rotation or an "L" for left hand rotation.

The pilot surface has changed on the covers. The right hand rotation charge pump cover will have 1 step and the left hand rotation charge pump cover will have 2 steps. Refer to the drawings below for example.

The part numbers of the charge pump covers will not change.

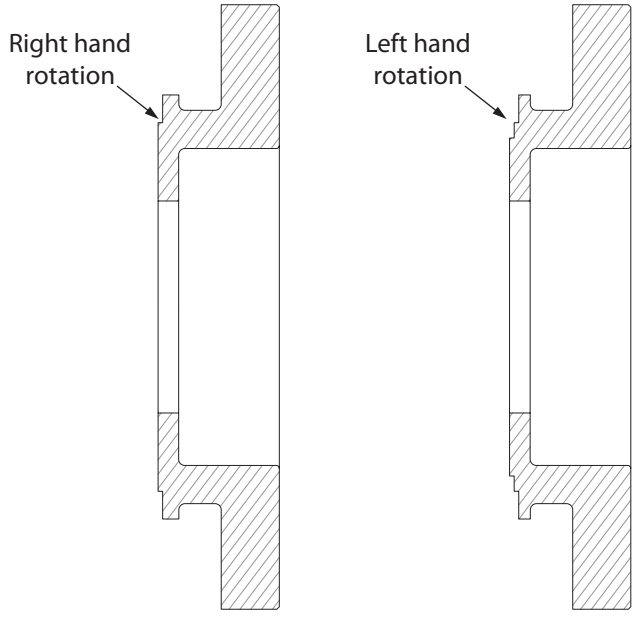

MODELS AFFECTED

Series 90 42 thru 100 cc pumps withauxiliary pad options.

SERIAL NUMBERS

This change became effective at serial number A-05-17-xxxxx

PART NUMBERS AFFECTED

None

PARTS DISPOSITION

■ Interchangeable

Series 90 42 cc Axial Piston Pump Service Parts Manual

Service Bulletin: SB-2009-074

PRODUCTS AFFECTED

Series 90 42, 130, 180 and 250cc variable pumps

SUBJECT

SAE A auxiliary mounting flange, O-ring seal

DESCRIPTION

Sauer-Danfoss is pleased to announce a design improvement on the SAE A auxiliary mounting flange adapter on its series 90 pumps. The frame sizes affected by this change are 42, 130, 180 and 250cc. All manufacturing locations producing these pumps will be changed to this configuration.

The improvement comes in the form of a more robust sealing geometry with a larger cross-section O-ring. The O-ring groove in the flange will now be sized to mate with a 2.62mm [0.103"] cross-section O-ring rather than the old 1.78mm [0.070"] cross-section O-ring. The Sauer-Danfoss part number for the new O-ring is 9004104-1520 (2.62mm [0.070"] x 82.22mm [3.237"]). The larger cross-section sealing geometry allows for the use of a donut style A pad seal and a new flat cover for improved assembly. This new configuration is qualified as a running cover. When installing an auxiliary pump, the donut style A pad seal must be discarded and the part number 9004104-1520 O-ring used.

The pumps will now be supplied with the donut style seal and new flat cover, instead of the small O-ring and stepped cover plate (shown in the drawing below).

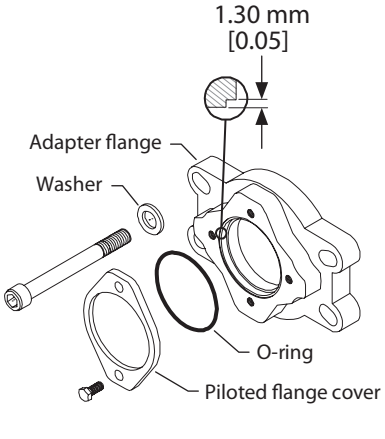

Old design

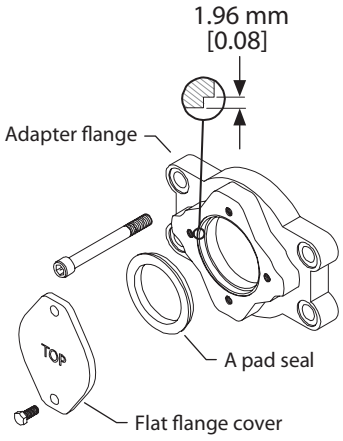

New design

MODELS AFFECTED

All series90 42, 130, 180 and 250cc pumps with an SAE A auxiliary mounting flange.

SERIAL NUMBERS

Change became effective at serial number N-09-30-xxxxx. (20 July 2009)

PART NUMBERS AFFECTED

Description	Old part number	New part number	Used on
A flange adapter	511040	520944	42cc
A flange adapter	505113	520946	130cc
A flange adapter	505136	520949	180 and 250cc
O-ring	9004104-0420	9004104-1520	all sizes
A pad seal	N/A	4800482	all sizes
Flange cover	9802336	4460586	all sizes

PARTS DISPOSITION

■ Interchangeable if new O-ring or if the pad seal and new cover are used.

Series 90 42 cc Axial Piston Pump Service Parts Manual
Service Bulletin: SB-2009-075

PRODUCTS AFFECTED

Series 90 42, 130, 180 and 250cc variable pumps

SUBJECT

SAE B auxiliary mounting flange, O-ring seal

DESCRIPTION

Sauer-Danfoss is pleased to announce a design improvement on the SAE B auxiliary mounting flange adapter on its series 90 pumps. The frame sizes affected by this change are 42, 130, 180 and 250cc. All manufacturing locations producing these pumps will be changed to this configuration.

The improvement comes in the form of a more robust sealing geometry with a larger cross-section O-ring. The O-ring groove in the flange will now be sized to mate with a 2.62mm [0.103"] cross-section O-ring rather than the old 1.78mm [0.070"] cross-section O-ring. The Sauer-Danfoss part number for the new O-ring is 9004104-1540 (2.62mm [0.070"] x 94.92mm [3.737"]). The larger cross-section sealing geometry allows for the use of a donut style B pad seal and a new flat cover for improved assembly. This new configuration is qualified as a running cover. When installing an auxiliary pump, the donut style B pad seal must be discarded and the part number 9004104-1540 O-ring used.

The pumps will now be supplied with the donut style seal and new flat cover, instead of the small O-ring and stepped cover plate (shown in the drawing below).

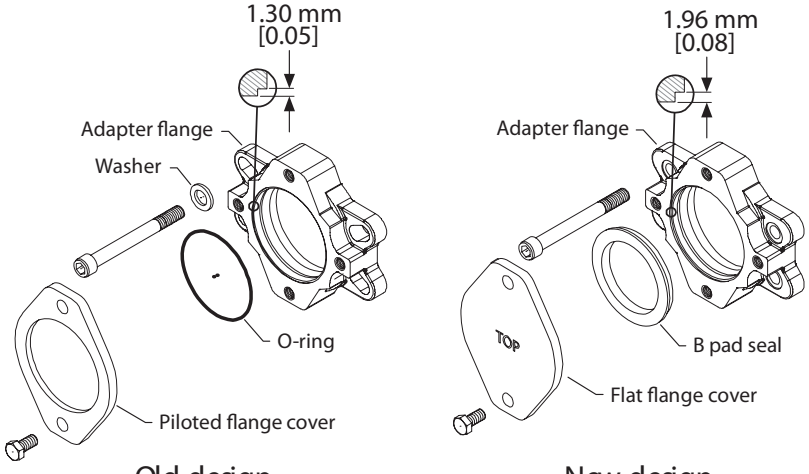

Old design

New design

MODELS AFFECTED

All series90 42, 130, 180 and 250cc pumps with an SAE B auxiliary mounting flange.

SERIAL NUMBERS

Change became effective at serial number N-09-30-xxxxx. (20 July 2009)

PART NUMBERS AFFECTED

Description	Old part number	New part number	Used on
B flange adapter	506778	520945	42cc
B flange adapter	503230	520947	130cc
B flange adapter	11000255	11039180	130cc
B flange adapter	505132	520950	180 and 250cc
O-ring	9004104-0450	9004104-1540	all sizes
B pad seal	N/A	8801061	all sizes
Flange cover	4460370	8801059	all sizes

PARTS DISPOSITION

■ Interchangeable if new O-ring or if the pad seal and new cover are used.

Series 90 42 cc Axial Piston Pump
Service Parts Manual
Service Bulletin: SB-2009-076

PRODUCTS AFFECTED

Series 90 130, 180 and 250cc variable pumps

SUBJECT

SAE C auxiliary mounting flange, O-ring seal

DESCRIPTION

Sauer-Danfoss is pleased to announce a design improvement on the SAE C auxiliary mounting flange adapter on its series 90 pumps. The frame sizes affected by this change are 130, 180 and 250cc. All manufacturing locations producing these pumps will be changed to this configuration.

The improvement comes in the form of a more robust sealing geometry with a larger cross-section O-ring. The O-ring groove in the flange will now be sized to mate with a 2.62mm [0.103"] cross-section O-ring rather than the old 1.78mm [0.070"] cross-section O-ring. The Sauer-Danfoss part number for the new O-ring is 9004104-1580 (2.62mm [0.070"] x 120.32mm [4.737"]). The larger cross-section sealing geometry allows for the use of a donut style C pad seal and a new flat cover for improved assembly. This new configuration is qualified as a running cover. When installing an auxiliary pump, the donut style C pad seal must be discarded and the part number 9004104-1580 O-ring used.

The pumps will now be supplied with the donut style seal and new flat cover, instead of the small O-ring and stepped cover plate (shown in the drawing below).

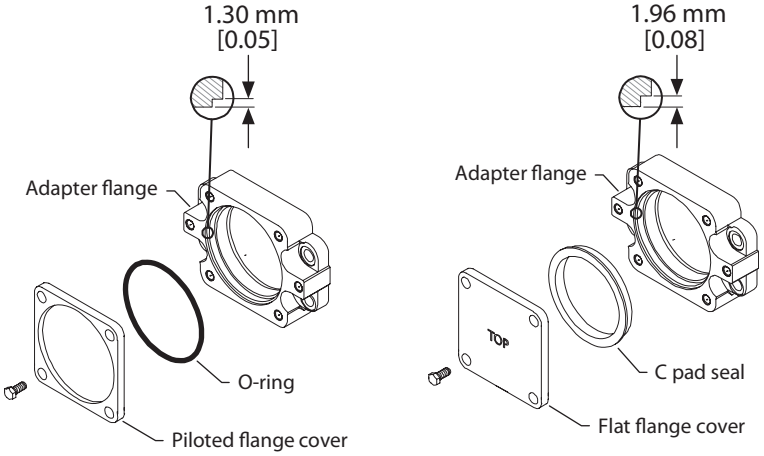

Old design

New design

MODELS AFFECTED

All series 90 130, 180 and 250cc pumps with an SAE C auxiliary mounting flange.

SERIAL NUMBERS

Change became effective at serial number N-09-30-xxxxx. (20 July 2009)

PART NUMBERS AFFECTED

Description	Old part number	New part number	Used on
C Flange adapter	505116	513617	130 cc
C Flange adapter	508407	11039184	130 cc
C Flange adapter	515116	513617	130 cc
C Flange adapter	505139	520951	180cc and 250cc
C Flange adapter	508406	11039178	180cc and 250cc
O-ring	9004100-0480	9004104-1580	All units
C pad seal	NA	8801062	All units
Flange cover	8800406	8801060	All units

PARTS DISPOSITION

■ Interchangeable if new O-ring or if the pad seal and new cover are used.

Notes

Notes

Notes

SAUER DANFOSS

Products we offer:

- Bent Axis Motors
- Closed Circuit Axial Piston Pumps and Motors
- Displays
- Electrohydraulic Power Steering
- Electrohydraulics
- Hydraulic Power Steering
- Integrated Systems
- Joysticks and Control Handles
- Microcontrollers and Software
- Open Circuit Axial Piston Pumps
- Orbital Motors
- PLUS+1™ GUIDE
- Proportional Valves
- Sensors
- Steering
- Transit Mixer Drives

Members of the Sauer-Danfoss Group:

Comatrol
www.comatrol.com

Schwarzmüller-Inverter
www.schwarzmueller-inverter.com

Turolla
www.turollaocg.com

Valmova
www.valmova.com

Hydro-Gear
www.hydro-gear.com

Sauer-Danfoss-Daikin
www.sauer-danfoss-daikin.com

520L0838 • Rev CA • March 2012

Sauer-Danfoss is a global manufacturer and supplier of high-quality hydraulic and electronic components. We specialize in providing state-of-the-art technology and solutions that excel in the harsh operating conditions of the mobile off-highway market. Building on our extensive applications expertise, we work closely with our customers to ensure exceptional performance for a broad range of off-highway vehicles.

We help OEMs around the world speed up system development, reduce costs and bring vehicles to market faster.
Sauer-Danfoss – Your Strongest Partner in Mobile Hydraulics.

Go to www.sauer-danfoss.com for further product information.

Wherever off-highway vehicles are at work, so is Sauer-Danfoss.

We offer expert worldwide support for our customers, ensuring the best possible solutions for outstanding performance. And with an extensive network of Global Service Partners, we also provide comprehensive global service for all of our components.

Please contact the Sauer-Danfoss representative nearest you.

Local address:

Sauer-Danfoss (US) Company
2800 East 13th Street
Ames, IA 50010, USA
Phone: +1 515 239 6000
Fax: +1 515 239 6618

Sauer-Danfoss ApS
DK-6430 Nordborg, Denmark
Phone: +45 7488 4444
Fax: +45 7488 4400

Sauer-Danfoss GmbH & Co. OHG
Postfach 2460, D-24531 Neumünster
Krokamp 35, D-24539 Neumünster, Germany
Phone: +49 4321 871 0
Fax: +49 4321 871 122

Sauer-Danfoss-Daikin LTD.
Shin-Osaka TERASAKI 3rd Bldg. 6F
1-5-28 Nishimiyahara, Yodogawa-ku
Osaka 532-0004, Japan
Phone: +81 6 6395 6066
Fax: +81 6 6395 8585

www.sauer-danfoss.com